BG95 Series

Hardware Design

LPWA Module Series

Version: 1.6

Date: 2023-08-14

Status: Released

At Quectel, our aim is to provide timely and comprehensive services to our customers. If you require any assistance, please contact our headquarters:

Quectel Wireless Solutions Co., Ltd.
Building 5, Shanghai Business Park Phase III (Area B), No.1016 Tianlin Road, Minhang District, Shanghai 200233, China
Tel: +86 21 5108 6236
Email: info@quectel.com

Or our local offices. For more information, please visit:
http://www.quectel.com/support/sales.htm.

For technical support, or to report documentation errors, please visit:
http://www.quectel.com/support/technical.htm.
Or email us at: support@quectel.com.

Legal Notices

We offer information as a service to you. The provided information is based on your requirements and we make every effort to ensure its quality. You agree that you are responsible for using independent analysis and evaluation in designing intended products, and we provide reference designs for illustrative purposes only. Before using any hardware, software or service guided by this document, please read this notice carefully. Even though we employ commercially reasonable efforts to provide the best possible experience, you hereby acknowledge and agree that this document and related services hereunder are provided to you on an “as available” basis. We may revise or restate this document from time to time at our sole discretion without any prior notice to you.

Use and Disclosure Restrictions

License Agreements

Documents and information provided by us shall be kept confidential, unless specific permission is granted. They shall not be accessed or used for any purpose except as expressly provided herein.

Copyright

Our and third-party products hereunder may contain copyrighted material. Such copyrighted material shall not be copied, reproduced, distributed, merged, published, translated, or modified without prior written consent. We and the third party have exclusive rights over copyrighted material. No license shall be granted or conveyed under any patents, copyrights, trademarks, or service mark rights. To avoid ambiguities, purchasing in any form cannot be deemed as granting a license other than the normal non-exclusive, royalty-free license to use the material. We reserve the right to take legal action for noncompliance with abovementioned requirements, unauthorized use, or other illegal or malicious use of the material.

Trademarks

Except as otherwise set forth herein, nothing in this document shall be construed as conferring any rights to use any trademark, trade name or name, abbreviation, or counterfeit product thereof owned by Quectel or any third party in advertising, publicity, or other aspects.

Third-Party Rights

This document may refer to hardware, software and/or documentation owned by one or more third parties ("third-party materials"). Use of such third-party materials shall be governed by all restrictions and obligations applicable thereto.

We make no warranty or representation, either express or implied, regarding the third-party materials, including but not limited to any implied or statutory, warranties of merchantability or fitness for a particular purpose, quiet enjoyment, system integration, information accuracy, and non-infringement of any third-party intellectual property rights with regard to the licensed technology or use thereof. Nothing herein constitutes a representation or warranty by us to either develop, enhance, modify, distribute, market, sell, offer for sale, or otherwise maintain production of any our products or any other hardware, software, device, tool, information, or product. We moreover disclaim any and all warranties arising from the course of dealing or usage of trade.

Privacy Policy

To implement module functionality, certain device data are uploaded to Quectel's or third-party's servers, including carriers, chipset suppliers or customer-designated servers. Quectel, strictly abiding by the relevant laws and regulations, shall retain, use, disclose or otherwise process relevant data for the purpose of performing the service only or as permitted by applicable laws. Before data interaction with third parties, please be informed of their privacy and data security policy.

Disclaimer

a) We acknowledge no liability for any injury or damage arising from the reliance upon the information.
b) We shall bear no liability resulting from any inaccuracies or omissions, or from the use of the information contained herein.
c) While we have made every effort to ensure that the functions and features under development are free from errors, it is possible that they could contain errors, inaccuracies, and omissions. Unless otherwise provided by valid agreement, we make no warranties of any kind, either implied or express, and exclude all liability for any loss or damage suffered in connection with the use of features and functions under development, to the maximum extent permitted by law, regardless of whether such loss or damage may have been foreseeable.
d) We are not responsible for the accessibility, safety, accuracy, availability, legality, or completeness of information, advertising, commercial offers, products, services, and materials on third-party websites and third-party resources.

Copyright © Quectel Wireless Solutions Co., Ltd. 2023. All rights reserved.

Safety Information

The following safety precautions must be observed during all phases of operation, such as usage, service or repair of any terminal or mobile incorporating the module. Manufacturers of the cellular terminal should notify users and operating personnel of the following safety information by incorporating these guidelines into all manuals of the product. Otherwise, Quectel assumes no liability for customers' failure to comply with these precautions.



Full attention must be paid to driving at all times in order to reduce the risk of an accident. Using a mobile while driving (even with a handsfree kit) causes distraction and can lead to an accident. Please comply with laws and regulations restricting the use of wireless devices while driving.



Switch off the cellular terminal or mobile before boarding an aircraft. The operation of wireless appliances in an aircraft is forbidden to prevent interference with communication systems. If there is an Airplane Mode, it should be enabled prior to boarding an aircraft. Please consult the airline staff for more restrictions on the use of wireless devices on an aircraft.



Wireless devices may cause interference on sensitive medical equipment, so please be aware of the restrictions on the use of wireless devices when in hospitals, clinics or other healthcare facilities.



Cellular terminals or mobiles operating over radio signal and cellular network cannot be guaranteed to connect in certain conditions, such as when the mobile bill is unpaid or the (U)SIM card is invalid. When emergency help is needed in such conditions, use emergency call if the device supports it. In order to make or receive a call, the cellular terminal or mobile must be switched on in a service area with adequate cellular signal strength. In an emergency, the device with emergency call function cannot be used as the only contact method considering network connection cannot be guaranteed under all circumstances.



The cellular terminal or mobile contains a transceiver. When it is ON, it receives and transmits radio frequency signals. RF interference can occur if it is used close to TV sets, radios, computers or other electric equipment.



In locations with explosive or potentially explosive atmospheres, obey all posted signs and turn off wireless devices such as mobile phone or other cellular terminals. Areas with explosive or potentially explosive atmospheres include fueling areas, below decks on boats, fuel or chemical transfer or storage facilities, and areas where the air contains chemicals or particles such as grain, dust or metal powders.

About the Document

Revision History

Version	Date	Author	Description
1.0	2019-09-30	Lex LI/ Garey XIE	Initial
1.1	2020-02-28	Lex LI/ Garey XIE	1. Updated the GNSS function into an optional feature. 2. Updated the LTE Power Class 5 to 21 dBm. 3. Added the parameters (power supply, operating frequency, output power, etc.) of BG95-M4 and BG95-M5. 4. Updated the transmitting power parameters in Table 3 and Table 40. 5. Updated the pin name of pin 21 from NETLIGHT into NET_STATUS. 6. Updated the block diagram in Figure 1. 7. Updated the power-on timing in Figure 8. 8. Updated the reference design of USB interface in Figure 16. 9. Updated the name of UART interface pins. 10. Added a recommended GNSS UART reference design (Dual-Transistor Solution) in Figure 19. 11. Added the timing of turning on the module with USB_BOOT in Figure 24. 12. Added the truth table of GRFC interfaces in Table 29. 13. Updated the GNSS performance in Table 30. 14. Updated the current consumption parameters in Chapter 6.4. 15. Updated the RF receiving sensitivity in Chapter 6.6.
1.2	2020-07-06	Lex LI/ Ellison WANG	1. Added BG95-M6. 2. Removed B14 for LTE Cat M1 and B26 for LTE Cat NB2. 3. Updated GNSS function into a standard

			configuration. 4. Added the power supply range of BG95-M4, and the typical power supply of BG95-MF. 5. Added the function diagram of BG95-M4, BG95-M5, BG95-M6 and BG95-MF in Chapter 2.3. 6. Enabled pin 56 (ANT_WIFI) for BG95-MF. 7. Updated the GNSS performance in Table 30. 8. Added the current consumption values of BG95-M1, BG95-M2, BG95-M5 and BG95-M6 in Chapter 6.4. 9. Updated the GNSS current consumption values in Chapter 6.4. 10. Added the RF output power values of BG95-M4, BG95-M5 and BG95-M6 in Chapter 6.5. 11. Updated the RF receiving sensitivity of BG95-M3 and added that of BG95-M5 in Chapter 6.6. 12. Updated electrostatic discharge characteristics in Chapter 6.7. 13. Updated the description of storage conditions in Chapter 8.1. 14. Updated the recommended reflow soldering thermal profile parameters in Chapter 8.2.
1.3	2021-01-08	Lex LI/ Ben JIANG/ Matt YE	1. Deleted BG95-N1. 2. Added the supply voltage range of BG95-MF. 3. Updated the dimensional tolerance of the module in Table 3 and Chapter 7. 4. Enabled fast shutdown interface (realized through pin 25 GPIO1) and added the description thereof in Chapter 3.6.3. 5. Updated the reference design of PON_TRIG in Figure 19. 6. Updated the GNSS performance in Table 28. 7. Updated the current consumption values of BG95-M1, BG95-M2, BG95-M3, BG95-M5 and BG95-M6, and added that of BG95-M4 and BG95-MF in Chapter 6.4. 8. Added the RF receiving sensitivity of BG95-M4, BG95-M6 and BG95-MF in Chapter 6.6.
1.4	2022-03-04	Lex LI/ Ben JIANG/ Matt YE	1. Updated pin 51 from RESERVED to GNSS_LNA_EN for BG95-M4 and BG95-MF. 2. Updated the minimum width of VBAT_RF trace from 2 mm to 2.7 mm, and updated the reference design of power supply in Chapter 3.5.2. 3. Updated the GNSS UART reference design in Figure 25.

			4. Added the high-speed operation mode of USB interface in Chapter 2.2 and Chapter 3.10. 5. Added Wi-Fi operating frequency and Wi-Fi antenna reference design in Chapter 5.3. 6. Updated the typical resolution of ADC interfaces in Table 25. 7. Updated peak supply current (I_{VBAT}) and USB_VBUS power supply requirements in Table 37. 8. Added some power consumption data, including the Wi-Fi power consumption of BG95-MF, in Chapter 6.4. 9. Added the max. Tx power of LTE HD-FDD B31, B72 and B73 at Power Class 2 for BG95-M4 in Table 56. 10. Updated conducted Rx sensitivity of BG95-M3 in Table 60. 11. Updated the recommended reflow soldering thermal profile parameters and added some notes about manufacturing and soldering in Chapter 8.2. 12. Optimized the presentation of packaging specifications in Chapter 8.3.
1.5	2022-10-09	Lex LI/ Ellison WANG/ Matt YE	1. Added the information about BG95-M9 2. Updated the USB serial drivers in Table 4. 3. Updated the accuracy of GNSS performance in Table 29. 4. Updated the recommended soldering thermal profile parameters in Chapter 8.2.
1.6	2023-08-14	Bayes YANG/ Pearl GUO/ Matt YE	1. Added the applicable model BG95-M8. 2. Updated the USB serial drivers in Table 4. 3. Added BG95-M9 GNSS power consumption data of open sky under real network in Table 57. 4. Added a note of the maximum output power of GNSS transmission in Chapter 6.5. 5. Updated BG95-M4 conducted Rx sensitivity in Table 67. 6. Updated the mechanical information in Figure 43, Figure 44 and Figure 45. 7. Added the information of mounting direction in Chapter 8.3.3.

Contents

Safety Information **3**
About the Document **4**
Contents **7**
Table Index **10**
Figure Index **12**

1 Introduction **14**
1.1. Special Mark 14

2 Product Overview **15**
2.1. General Description 15
2.2. Key Features 18
2.3. Functional Diagram 20
2.4. EVB Kit 25

3 Application Interfaces **26**
3.1. Pin Assignment 27
3.2. Pin Description 28
3.3. Operating Modes 35
3.4. Power Saving 36
3.4.1. Airplane Mode 36
3.4.2. Power Saving Mode (PSM) 36
3.4.3. Extended Idle Mode DRX (e-I-DRX) 37
3.4.4. Sleep Mode 37
3.4.4.1. UART Application 37
3.5. Power Supply 38
3.5.1. Power Supply Pins 38
3.5.2. Voltage Stability Requirements 39
3.5.3. Power Supply Voltage Monitoring 41
3.6. Turn On and Turn Off 41
3.6.1. Turn On with PWRKEY 41
3.6.2. Turn Off 43
3.6.2.1. Turn Off with PWRKEY 43
3.6.2.2. Turn Off with AT Command 44
3.6.3. Fast Shutdown 44
3.7. Reset 45
3.8. PON_TRIG Interface 46
3.9. (U)SIM Interface 47
3.10. USB Interface 50
3.11. UART 51
3.12. PCM and I2C Interfaces 54
3.13. Network Status Indication 55
3.14. STATUS 56

3.15. MAIN_RI 57
3.16. USB_BOOT 58
3.17. ADC Interfaces 59
3.18. GPIO Interfaces 60
3.19. GRFC Interfaces 61

4 GNSS 63
4.1. General Description 63
4.2. GNSS Performance 63
4.3. Layout Guidelines 64

5 Antenna Interfaces 65
5.1. Main Antenna Interface 65
5.1.1. Pin Definition 65
5.1.2. Operating Frequency 65
5.1.3. Reference Design 67
5.2. GNSS Antenna Interface 67
5.2.1. Pin Definition 67
5.2.2. GNSS Operating Frequency 68
5.2.3. Reference Design 68
5.3. Wi-Fi Antenna Interface 69
5.3.1. Pin Definition 69
5.3.2. Wi-Fi Operating Frequency 69
5.3.3. Reference Design 69
5.4. RF Routing Guidelines 70
5.5. Antenna Installation 72
5.5.1. Requirements for Antenna Design 72
5.5.2. RF Connector Recommendation 73

6 Electrical Characteristics and Reliability 75
6.1. Absolute Maximum Ratings 75
6.2. Power Supply Ratings 75
6.3. Operating and Storage Temperatures 76
6.4. Power Consumption 77
6.4.1. BG95-M1 Power Consumption 77
6.4.2. BG95-M2 Power Consumption 78
6.4.3. BG95-M3 Power Consumption 80
6.4.4. BG95-M4 Power Consumption 83
6.4.5. BG95-M5 Power Consumption 85
6.4.6. BG95-M6 Power Consumption 88
6.4.7. BG95-MF Power Consumption 90
6.4.8. BG95-M8 Power Consumption 92
6.4.9. BG95-M9 Power Consumption 95
6.4.10. BG95 Series GNSS Power Consumption 97
6.4.11. BG95-MF Wi-Fi Power Consumption 101
6.5. Tx Power 101

6.6. Rx Sensitivity 103
6.7. ESD Protection 113

7 Mechanical Information 114
7.1. Mechanical Dimensions 114
7.2. Recommended Footprint 116
7.3. Top and Bottom Views 117

8 Storage, Manufacturing and Packaging 118
8.1. Storage Conditions 118
8.2. Manufacturing and Soldering 119
8.3. Packaging Specifications 120
8.3.1. Carrier Tape 121
8.3.2. Plastic Reel 121
8.3.3. Mounting Direction 122
8.3.4. Packaging Process 122

9 Appendix A References 124

10 Appendix B Compulsory Certifications 127

Table Index

Table 1: Special Mark 14
Table 2: Different Selections of BG95 Series Module 15
Table 3: Frequency Bands of BG95 Series Modules 16
Table 4: Key Features of BG95 Series Module 18
Table 5: Definition of I/O Parameters 28
Table 6: Pin Description 29
Table 7: Operating Modes of BG95 Series Module 35
Table 8: VBAT and GND Pins 38
Table 9: Pin Definition of PWRKEY 41
Table 10: Pin Definition of Fast Shutdown Interface 44
Table 11: Pin Definition of RESET_N 45
Table 12: Pin Definition of PON_TRIG Interface 47
Table 13: Pin Definition of (U)SIM Interface 47
Table 14: Pin Definition of USB Interface 50
Table 15: Pin Definition of Main UART 51
Table 16: Pin Definition of Debug UART 52
Table 17: Pin Definition of GNSS UART 52
Table 18: Pin Definition of PCM and I2C Interfaces 55
Table 19: Pin Definition of NET_STATUS 56
Table 20: Operating State of NET_STATUS 56
Table 21: Pin Definition of STATUS 57
Table 22: Default Behaviours of MAIN_RI 57
Table 23: Pin Definition of USB_BOOT Interface 58
Table 24: Pin Definition of ADC Interfaces 60
Table 25: Characteristics of ADC Interfaces 60
Table 26: Pin Definition of GPIO Interfaces 61
Table 27: Pin Definition of GRFC Interfaces 61
Table 28: Truth Table of GRFC Interfaces 62
Table 29: GNSS Performance 63
Table 30: Pin Definition of Main Antenna Interface 65
Table 31: Operating Frequency of BG95 Series Module 65
Table 32: Pin Definition of GNSS Antenna Interface 67
Table 33: GNSS Operating Frequency 68
Table 34: Pin Definition of Wi-Fi Antenna Interface 69
Table 35: Wi-Fi Operating Frequency 69
Table 36: Requirements for Antenna Design 72
Table 37: Absolute Maximum Ratings 75
Table 38: Power Supply Ratings 75
Table 39: Operating and Storage Temperatures 76
Table 40: BG95-M1 Power Consumption (3.3 V Power Supply, Room Temperature) 77
Table 41: BG95-M2 Power Consumption (3.3 V Power Supply, Room Temperature) 78
Table 42: BG95-M3 Power Consumption (3.8 V Power Supply, Room Temperature) 80

Table 43: BG95-M4 Power Consumption (3.8 V Power Supply, Room Temperature) 83
Table 44: BG95-M5 Power Consumption (3.8 V Power Supply, Room Temperature) 85
Table 45: BG95-M6 Power Consumption (3.8 V Power Supply, Room Temperature) 88
Table 46: BG95-MF Power Consumption (3.8 V Power Supply, Room Temperature) 90
Table 47: BG95-M8 Power Consumption (3.8 V Power Supply, Room Temperature) 92
Table 48: BG95-M9 Power Consumption (3.8 V Power Supply, Room Temperature) 95
Table 49: GNSS Power Consumption of BG95-M1 (3.3 V Power Supply, Room Temperature)..... 97
Table 50: GNSS Power Consumption of BG95-M2 (3.3 V Power Supply, Room Temperature)..... 98
Table 51: GNSS Power Consumption of BG95-M3 (3.8 V Power Supply, Room Temperature)..... 98
Table 52: GNSS Power Consumption of BG95-M4 (3.8 V Power Supply, Room Temperature)..... 99
Table 53: GNSS Power Consumption of BG95-M5 (3.8 V Power Supply, Room Temperature)..... 99
Table 54: GNSS Power Consumption of BG95-M6 (3.8 V Power Supply, Room Temperature)..... 99
Table 55: GNSS Power Consumption of BG95-MF (3.8 V Power Supply, Room Temperature) 100
Table 56: GNSS Power Consumption of BG95-M8 (3.8 V Power Supply, Room Temperature)..... 100
Table 57: GNSS Power Consumption of BG95-M9 (3.8 V Power Supply, Room Temperature)..... 101
Table 58: Wi-Fi Power Consumption of BG95-MF (3.8 V Power Supply, Room Temperature) 101
Table 59: Conducted Tx Power of BG95-M1/-M2/-M3/-MF..... 101
Table 60: Conducted Tx Power of BG95-M4..... 102
Table 61: Conducted Tx Power of BG95-M5/-M6..... 102
Table 62: Conducted Tx Power of BG95-M8..... 102
Table 63: Conducted Tx Power of BG95-M9..... 103
Table 64: BG95-M1 Conducted Rx Sensitivity 103
Table 65: BG95-M2 Conducted Rx Sensitivity 104
Table 66: BG95-M3 Conducted Rx Sensitivity 105
Table 67: BG95-M4 Conducted Rx Sensitivity 106
Table 68: BG95-M5 Conducted Rx Sensitivity 107
Table 69: BG95-M6 Conducted Rx Sensitivity 108
Table 70: BG95-MF Conducted Rx Sensitivity 109
Table 71: BG95-MF Wi-Fi Conducted Rx Sensitivity..... 110
Table 72: BG95-M8 Conducted Rx Sensitivity 110
Table 73: BG95-M9 Conducted Rx Sensitivity 112
Table 74: Electrostatic Discharge Characteristics (Temperature: 25–30 °C, Humidity: 40 ±5 %) 113
Table 75: Recommended Thermal Profile Parameters 120
Table 76: Carrier Tape Dimension Table (Unit: mm)..... 121
Table 77: Plastic Reel Dimension Table (Unit: mm)..... 122
Table 78: Packaging Specifications of BG95 Series Module 123
Table 79: Related Documents..... 124
Table 80: Terms and Abbreviations..... 124

Figure Index

Figure 1: Functional Diagram of BG95-M1/-M2 21
Figure 2: Functional Diagram of BG95-M3 21
Figure 3: Functional Diagram of BG95-M4 22
Figure 4: Functional Diagram of BG95-M5 22
Figure 5: Functional Diagram of BG95-M6 23
Figure 6: Functional Diagram of BG95-MF 23
Figure 7: Functional Diagram of BG95-M8 24
Figure 8: Functional Diagram of BG95-M9 24
Figure 9: Pin Assignment (Top View) 27
Figure 10: Sleep Mode Application via UART 38
Figure 11: Power Supply Limits During Burst Transmission (BG95-M3/-M5/-M8) 39
Figure 12: Star Structure of the Power Supply 40
Figure 13: Turn On the Module with a Driver Circuit 41
Figure 14: Turn On the Module with a Push Button 42
Figure 15: Power-up Timing 42
Figure 16: Power-down Timing 43
Figure 17: Fast Shutdown Timing 45
Figure 18: Reference Design of RESET_N with a Driver Circuit 45
Figure 19: Reference Design of RESET_N with a Push Button 46
Figure 20: Reset Timing 46
Figure 21: Reference Design of PON_TRIG 47
Figure 22: Reference Design of (U)SIM Interface with an 8-Pin (U)SIM Card Connector 48
Figure 23: Reference Design of (U)SIM Interface with a 6-Pin (U)SIM Card Connector 49
Figure 24: Reference Design of USB Interface 50
Figure 25: Main UART Reference Design (IC Solution) 53
Figure 26: Main UART Reference Design (Transistor Solution) 53
Figure 27: GNSS UART Reference Design (IC Solution Without Internal Pull-up) 54
Figure 28: Reference Design of PCM and I2C Application with Audio Codec 55
Figure 29: Reference Design of the Network Status Indicator 56
Figure 30: Reference Design of STATUS 57
Figure 31: Reference Design of USB_BOOT Interface 58
Figure 32: Timing for Turning on the Module with USB_BOOT 59
Figure 33: Reference Design of Main Antenna Interface 67
Figure 34: Reference Design of GNSS Antenna Interface 68
Figure 35: Reference Design of Wi-Fi Antenna Interface 69
Figure 36: Microstrip Design on a 2-layer PCB 70
Figure 37: Coplanar Waveguide Design on a 2-layer PCB 70
Figure 38: Coplanar Waveguide Design on a 4-layer PCB (Layer 3 as Reference Ground) 70
Figure 39: Coplanar Waveguide Design on a 4-layer PCB (Layer 4 as Reference Ground) 71
Figure 40: Dimensions of the Receptacle (Unit: mm) 73
Figure 41: Specifications of Mated Plugs 73

Figure 42: Space Factor of Mated Connectors (Unit: mm) 74
Figure 43: Module Top and Side Dimensions 114
Figure 44: Module Bottom Dimensions (Bottom View) 115
Figure 45: Recommended Footprint (Top View) 116
Figure 46: Top and Bottom Views 117
Figure 47: Recommended Reflow Soldering Thermal Profile 119
Figure 48: Carrier Tape Dimension Drawing 121
Figure 49: Plastic Reel Dimension Drawing 121
Figure 50: Mounting Direction 122
Figure 51: Packaging Process 123
Figure 52: JATE/TELEC Certification ID of BG95-M1/-M2 127
Figure 53: JATE/TELEC Certification ID of BG95-M3 127
Figure 54: JATE/TELEC Certification ID of BG95-M5 127
Figure 55: JATE/TELEC Certification ID of BG95-M6 128

1 Introduction

This document defines BG95 series module and describes its air and hardware interfaces which connect to your applications.

This document helps you quickly understand the interface specifications, electrical and mechanical details, as well as other related information of BG95 series. To facilitate application designs, it also includes some reference designs. The document, coupled with application notes and user guides, makes it easy to design and set up mobile applications with the module.

1.1. Special Mark

Table 1: Special Mark

Mark	Definition
*	Unless otherwise specified, when an asterisk (*) is used after a function, feature, interface, pin name, AT command, or argument, it indicates that the function, feature, interface, pin, AT command, or argument is under development and currently not supported; and the asterisk (*) after a model indicates that the sample of the model is currently unavailable.

2 Product Overview

2.1. General Description

BG95 is a series of embedded IoT (LTE Cat M1, LTE Cat NB2 and EGPRS) wireless communication modules. It provides data connectivity on LTE HD-FDD and GPRS/EGPRS networks. It also provides GNSS and voice [1] functions to meet your specific application demands.

The module is based on an architecture in which WWAN and GNSS Rx chains share certain hardware blocks. However, the module does not support concurrent operation of WWAN and GNSS. The solution adopted in the module is a form of coarse time-division multiplexing (TDM) between WWAN and GNSS Rx chains. Given the relaxed latency requirements of most LPWA applications, time-division sharing of resources can be made largely transparent to applications. For more details, see ***document [1]***.

BG95 series is an industrial-grade module for industrial and commercial applications only.

Table 2: Different Selections of BG95 Series Module

Model	Cat M1	Cat NB2 [2]	GSM	Wi-Fi Scan	GNSS
BG95-M1	√	-	-	-	√
BG95-M2	√	√	-	-	√
BG95-M3	√	√	√	-	√
BG95-M4	√	√	-	-	√
BG95-M5	√	√	√	-	√
BG95-M6	√	√	-	-	√
BG95-MF	√	√	-	√	√
BG95-M8	√	√	√	-	√

[1] BG95 series module supports VoLTE (Voice over LTE) under LTE Cat M1, but this function in BG95-MF and BG95-M9 is under development. Additionally, BG95-M3 and BG95-M5 also support CS voice under GSM.
[2] LTE Cat NB2 is backward compatible with LTE Cat NB1.

BG95-M9	√	√	-	-	√

NOTE

1. √: Supported.
2. -: Not supported.

Table 3: Frequency Bands of BG95 Series Modules

Model	Supported Bands	LTE Bands Power Class	GNSS
BG95-M1	**Cat M1 Only:** LTE HD-FDD: B1/B2/B3/B4/B5/B8/B12/B13/B18/B19/B20/B25/B26/B27/B28/B66/B85	Power Class 5 (21 dBm)	GPS, GLONASS, BDS, Galileo, QZSS
BG95-M2	**Cat M1:** LTE HD-FDD: B1/B2/B3/B4/B5/B8/B12/B13/B18/B19/B20/B25/B26/B27/B28/B66/B85 **Cat NB2:** LTE HD-FDD: B1/B2/B3/B4/B5/B8/B12/B13/B18/B19/B20/B25/B28/B66/B71/B85	Power Class 5 (21 dBm)	GPS, GLONASS, BDS, Galileo, QZSS
BG95-M3	**Cat M1:** LTE HD-FDD: B1/B2/B3/B4/B5/B8/B12/B13/B18/B19/B20/B25/B26/B27/B28/B66/B85 **Cat NB2:** LTE HD-FDD: B1/B2/B3/B4/B5/B8/B12/B13/B18/B19/B20/B25/B28/B66/B71/B85 **EGPRS:** GSM850/EGSM900/DCS1800/PCS1900	Power Class 5 (21 dBm)	GPS, GLONASS, BDS, Galileo, QZSS
BG95-M4	**Cat M1:** LTE HD-FDD: B1/B2/B3/B4/B5/B8/B12/B13/B18/B19/B20/B25/B26/B27/B28/B31/B66/B72/B73/B85 **Cat NB2:** LTE HD-FDD:	Power Class 2 (26 dBm) [3] @ B31/B72/B73 Power Class 3 (23 dBm) [3] @ B31/B72/B73	GPS, GLONASS, BDS, Galileo, QZSS

[3] LTE HD-FDD B31, B72 and B73 on BG95-M4 support either Power Class 2 (26 dBm) or Power Class 3 (23 dBm). For more details, consult Quectel Technical Support (support@quectel.com).

	B1/B2/B3/B4/B5/B8/B12/B13/B18/B19/B20/ B25/B28/B31/B66/B72/B73/B85	Power Class 5 (21 dBm) @ other LTE bands	
BG95-M5	**Cat M1:** LTE HD-FDD: B1/B2/B3/B4/B5/B8/B12/B13/B18/B19/B20/ B25/B26/B27/B28/B66/B85 **Cat NB2:** LTE HD-FDD: B1/B2/B3/B4/B5/B8/B12/B13/B18/B19/B20/ B25/B28/B66/B71/B85 **EGPRS:** GSM850/EGSM900/DCS1800/PCS1900	Power Class 3 (23 dBm)	GPS, GLONASS, BDS, Galileo, QZSS
BG95-M6	**Cat M1:** LTE HD-FDD: B1/B2/B3/B4/B5/B8/B12/B13/B18/B19/B20/ B25/B26/B27/B28/B66/B85 **Cat NB2:** LTE HD-FDD: B1/B2/B3/B4/B5/B8/B12/B13/B18/B19/B20/ B25/B28/B66/B71/B85	Power Class 3 (23 dBm)	GPS, GLONASS, BDS, Galileo, QZSS
BG95-MF	**Cat M1:** LTE HD-FDD: B1/B2/B3/B4/B5/B8/B12/B13/B18/B19/B20/ B25/B26/B27/B28/B66/B85 **Cat NB2:** LTE HD-FDD: B1/B2/B3/B4/B5/B8/B12/B13/B18/B19/B20/ B25/B28/B66/B71/B85 **Wi-Fi Scan:** 2.4 GHz	Power Class 5 (21 dBm)	GPS, GLONASS, BDS, Galileo, QZSS
BG95-M8	**Cat M1:** LTE HD-FDD: B1/B2/B3/B4/B5/B8/B12/B13/B18/B19/B20/ B25/B26/B27/B28/B31/B66/B72/B73/B85 **Cat NB2:** LTE HD-FDD: B1/B2/B3/B4/B5/B8/B12/B13/B18/B19/B20/ B25/B28/B31/B66/B72/B73/B85 **EGPRS:** GSM850/EGSM900/DCS1800/PCS1900	Power Class 2 (26 dBm) @ B31/B72/B73 Power Class 5 (21 dBm) @ other LTE bands	GPS, GLONASS, BDS, Galileo, QZSS
BG95-M9	**Cat M1:** LTE HD-FDD: B1/B2/B3/B4/B5/B8/B12/B13/B18/B19/B20/ B25/B26/B27/B28/B31/B66/B72/B73/B85/	Power Class 2 (26 dBm) @ B31/B72/B73 Power Class 3 (23 dBm)	GPS, GLONASS, BDS, Galileo,

	B87/B88 **Cat NB2:** LTE HD-FDD: B1/B2/B3/B4/B5/B8/B12/B13/B18/B19/B20/ B25/B28/B31/B66/B72/B73/B85/B86/ B87/B88	@ other LTE bands	QZSS

With such a compact size as 23.6 mm × 19.9 mm × 2.2 mm, the module can meet different requirements for M2M applications such as smart metering, tracking system, security and wireless POS.

BG95 is a series of SMD type modules that can be embedded into applications through the 102 LGA pins. It supports internet service protocols like TCP, UDP and PPP. Based on extended AT commands developed by Quectel, you can use these internet service protocols easily.

2.2. Key Features

Table 4: Key Features of BG95 Series Module

Features	Details
Power Supply	**BG95-M1/-M2:** ● Supply voltage [4]: 2.6–4.8 V ● Typical supply voltage: 3.3 V **BG95-M3/-M5/-M6/-MF/-M8:** ● Supply voltage: 3.3–4.3 V ● Typical supply voltage: 3.8 V **BG95-M4/-M9:** ● Supply voltage: 3.2–4.2 V ● Typical supply voltage: 3.8 V
Transmitting Power [5]	**LTE HD-FDD bands:** ● Class 5 (21 dBm +1.7/-3 dB) ● Class 3 (23 dBm ±2 dB) ● Class 2 (26 dBm ±2 dB) **GSM bands:** ● Class 4 (33 dBm ±2 dB) for GSM850 ● Class 4 (33 dBm ±2 dB) for EGSM900 ● Class 1 (30 dBm ±2 dB) for DCS1800 ● Class 1 (30 dBm ±2 dB) for PCS1900

[4] For every VBAT transition/re-insertion from 0 V, the minimum power supply voltage should be higher than 2.7 V. After the module starts up normally, the minimum safety voltage is 2.6 V. To ensure full functionality mode, the minimum power supply voltage should be higher than 2.8 V.
[5] See ***Table 3*** or ***Chapter 6.5*** for the LTE bands power class level of each module model.

	● Class E2 (27 dBm ±3 dB) for GSM850 8-PSK ● Class E2 (27 dBm ±3 dB) for EGSM900 8-PSK ● Class E2 (26 dBm ±3 dB) for DCS1800 8-PSK ● Class E2 (26 dBm ±3 dB) for PCS1900 8-PSK
LTE Features [6]	● Supports 3GPP Rel-14 ● Supports LTE Cat M1 and LTE Cat NB2 ● Supports 1.4 MHz RF bandwidth for LTE Cat M1 ● Supports 200 kHz RF bandwidth for LTE Cat NB2 ● Max. transmission data rates: Cat M1: 588 kbps (DL)/1119 kbps (UL) Cat NB2: 127 kbps (DL)/158.5 kbps (UL)
GSM Features [6]	**GPRS:** ● Supports GPRS multi-slot class 33 (33 by default) ● Coding scheme: CS 1–4 ● Max. 107 kbps (DL)/ Max. 85.6 kbps (UL) **EDGE:** ● Supports EDGE multi-slot class 33 (33 by default) ● Supports GMSK and 8-PSK for different MCS (Modulation and Coding Scheme) ● Downlink coding schemes: MCS 1–9 ● Uplink coding schemes: MCS 1–9 ● Max. 296 kbps (DL)/ Max. 236.8 kbps (UL)
Internet Protocol Features	● Supports PPP/TCP/UDP/SSL/TLS/FTP(S)/HTTP(S)/NITZ/PING/MQTT/ LwM2M/CoAP/IPv6 protocols ● Supports PAP and CHAP for PPP connections
SMS	● Text and PDU mode ● Point-to-point MO and MT ● SMS cell broadcast ● SMS storage: ME by default
(U)SIM Interface	Supports 1.8 V USIM/SIM card only
PCM Interface [7]	Supports one digital audio interface: PCM interface for VoLTE or GSM CS voice
USB Interface	● Compliant with USB 2.0 specification (slave only) ● Supports operations at high-speed, full-speed and low-speed modes ● Used for AT command communication, data transmission, GNSS NMEA sentences output, software debugging and firmware upgrade ● Supports USB serial drivers for Windows 7/8/8.1/10/11, Linux 2.6–6.5, Android 4.x–13.x
UART	**Main UART:** ● Used for data transmission and AT command communication ● 115200 bps by default

[6] See ***Table 3*** or ***Chapter 6.5*** for the LTE and GSM features of each model.
[7] The VoLTE function of the PCM and I2C interfaces is under development for BG95-MF, BG98-M8 and BG95-M9.

	● The default frame format is 8N1 (8 data bits, no parity, 1 stop bit) ● Supports RTS and CTS hardware flow control **Debug UART:** ● Used for software debugging and log output ● Supports 115200 bps **GNSS UART:** ● Used for GNSS data and NMEA sentences output ● 115200 bps baud rate by default
GNSS Features	● GPS, GLONASS, BDS, Galileo and QZSS ● 1 Hz data update rate by default
AT Commands	● *3GPP TS 27.007* and *3GPP TS 27.005* AT commands ● Quectel enhanced AT commands
Network Indication	One NET_STATUS pin for network connectivity status indication
Antenna Interfaces	● Main antenna interface (ANT_MAIN) ● GNSS antenna interface (ANT_GNSS) ● Wi-Fi antenna interface (ANT_WIFI, for BG95-MF only)
Physical Characteristics	● Dimensions: (23.6 ±0.2) mm × (19.9 ±0.2) mm × (2.2 ±0.2) mm ● Weight: approx. 2.15 g
Temperature Range	● Operating temperature range: -35 to +75 °C [8] ● Extended temperature range: -40 to +85 °C [9] ● Storage temperature range: -40 to +90 °C
Firmware Upgrade	USB interface, DFOTA
RoHS	All hardware components are fully compliant with EU RoHS directive

2.3. Functional Diagram

The following figures show the block diagram of BG95 series and the major functional parts.

- Power management
- Baseband
- Radio frequency
- Peripheral interfaces

[8] Within the operating temperature range, the module meets 3GPP specifications.
[9] Within the extended temperature range, the module remains the ability to establish and maintain functions such as voice*, SMS and data transmission, without any unrecoverable malfunction. Radio spectrum and radio network are not influenced, while one or more specifications, such as P_{out}, may exceed the specified tolerances of 3GPP. When the temperature returns to the operating temperature range, the module meets 3GPP specifications again.

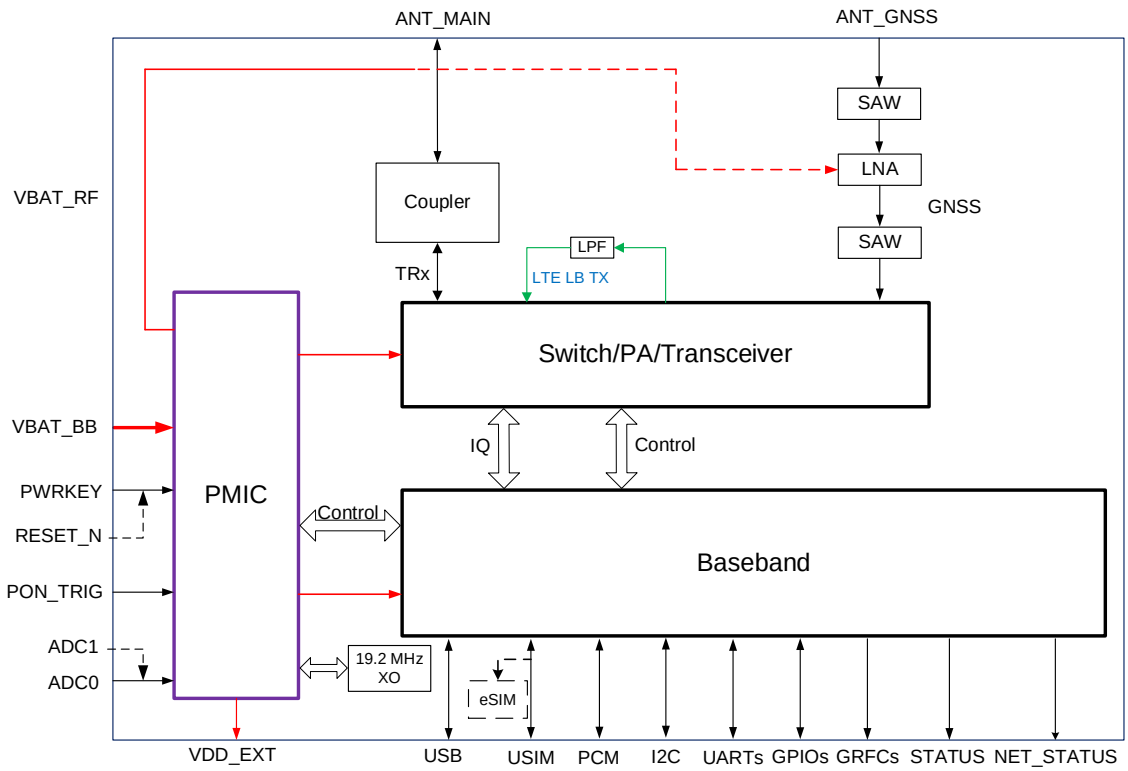

Figure 1: Functional Diagram of BG95-M1/-M2

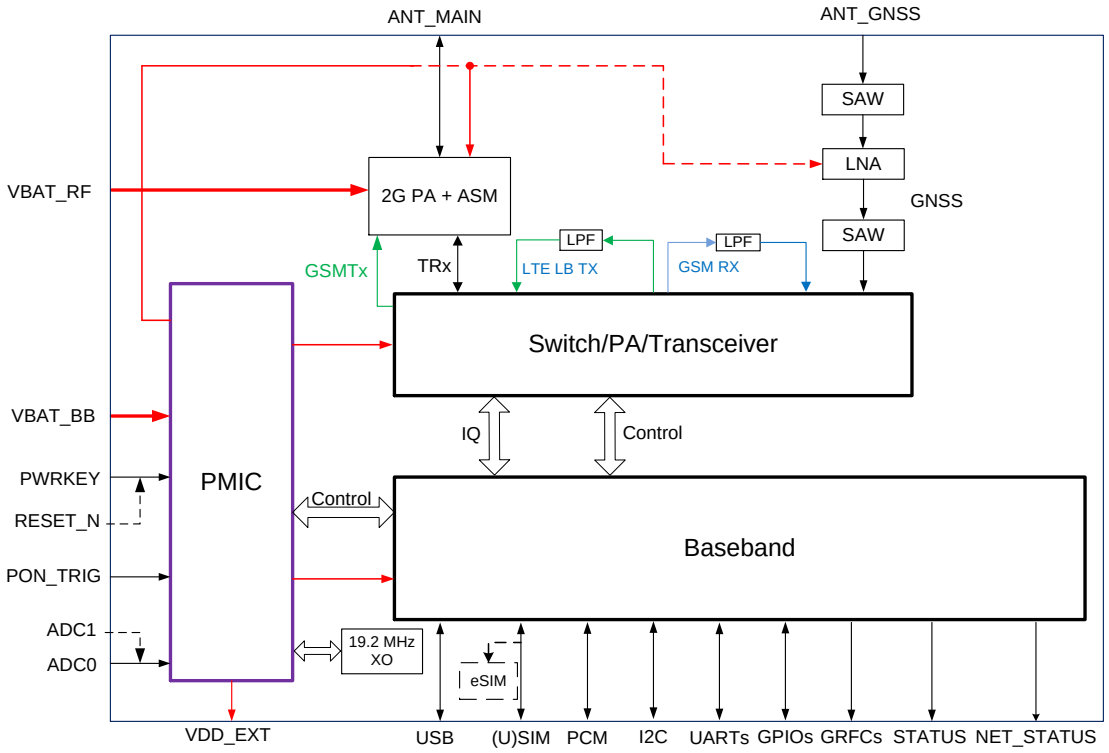

Figure 2: Functional Diagram of BG95-M3

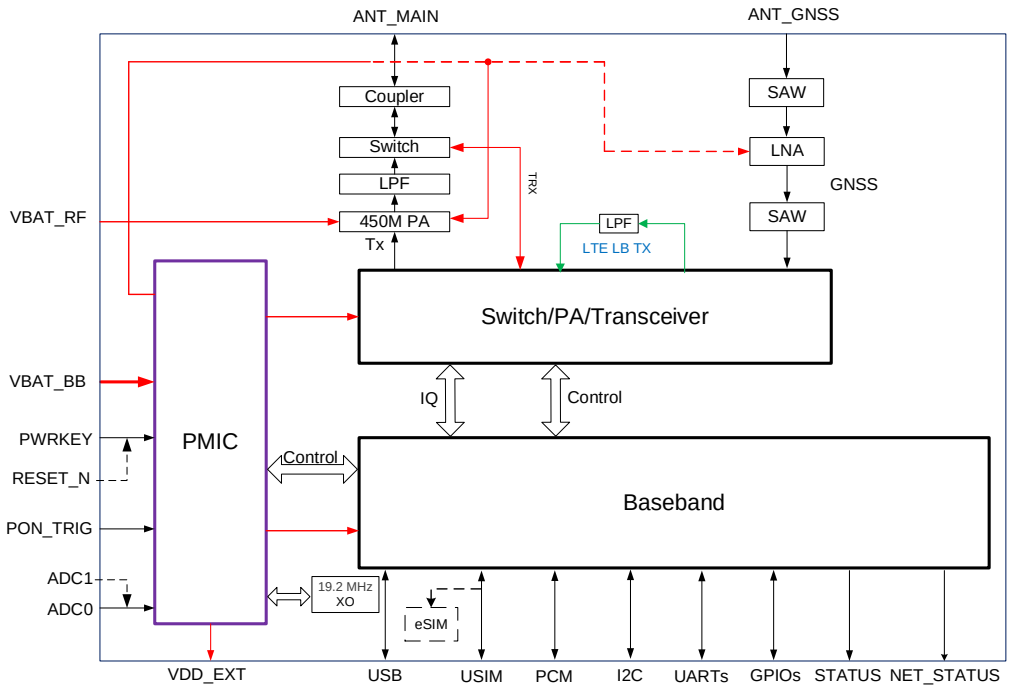

Figure 3: Functional Diagram of BG95-M4

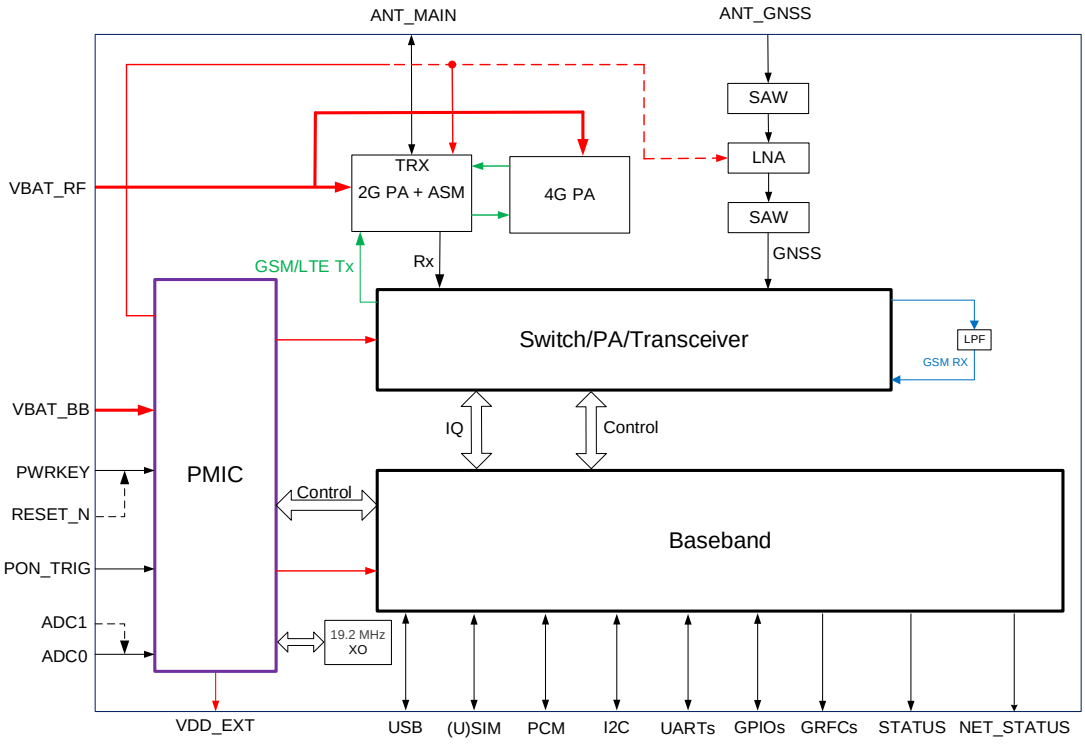

Figure 4: Functional Diagram of BG95-M5

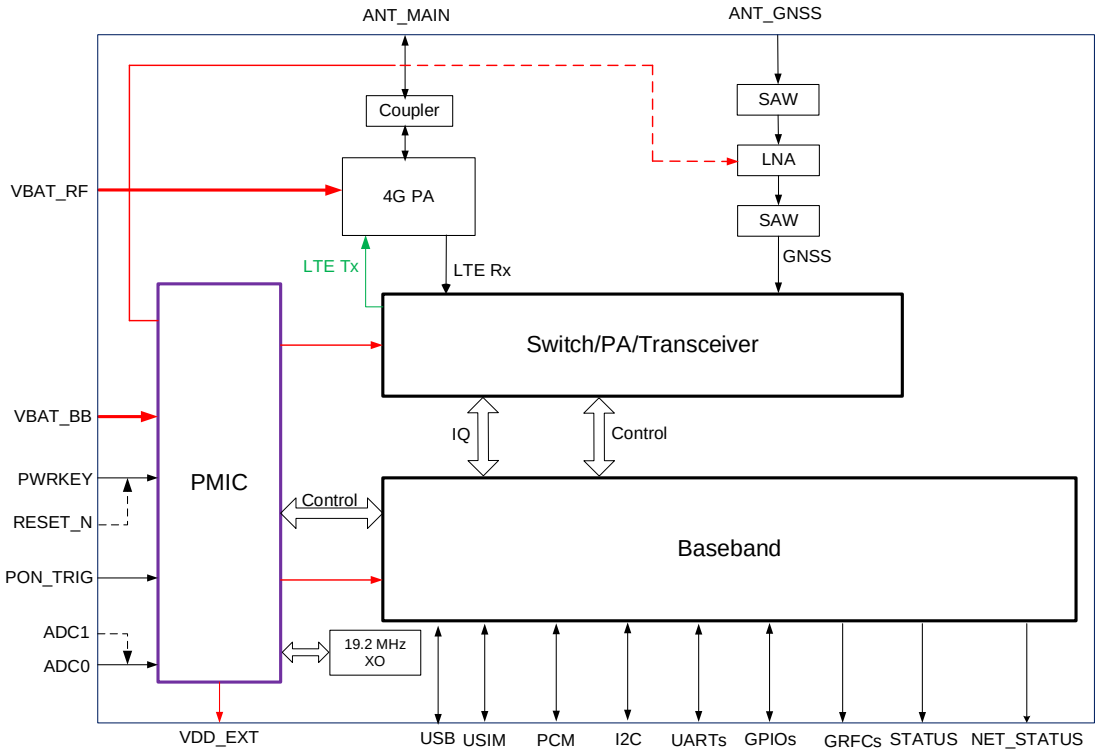

Figure 5: Functional Diagram of BG95-M6

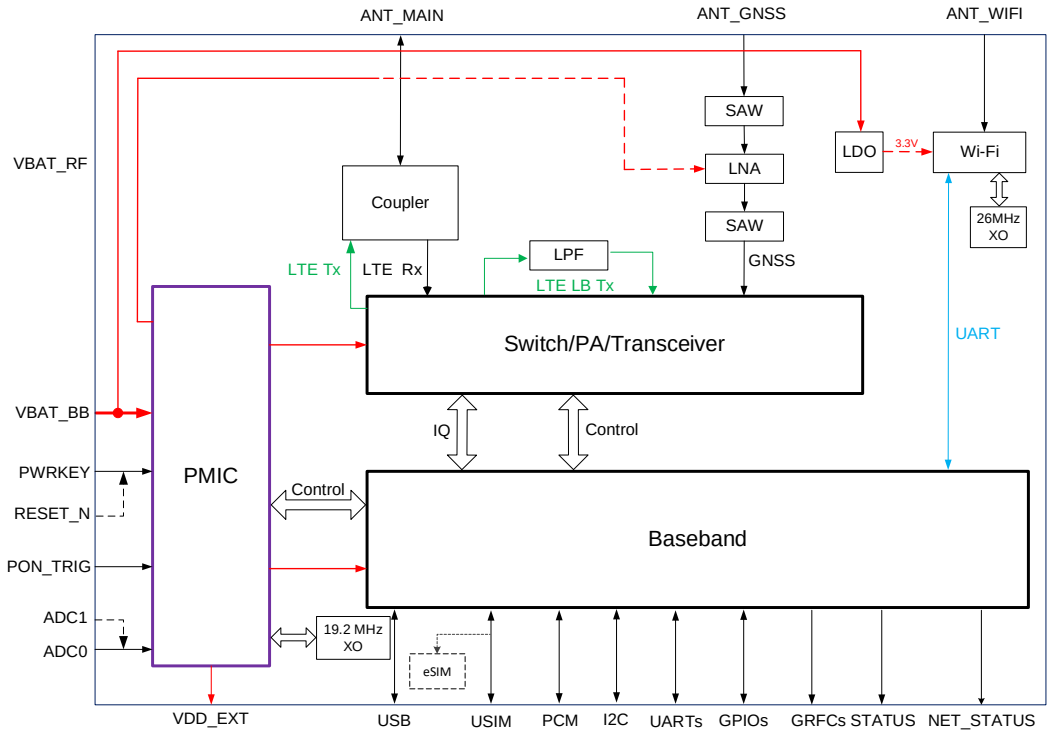

Figure 6: Functional Diagram of BG95-MF

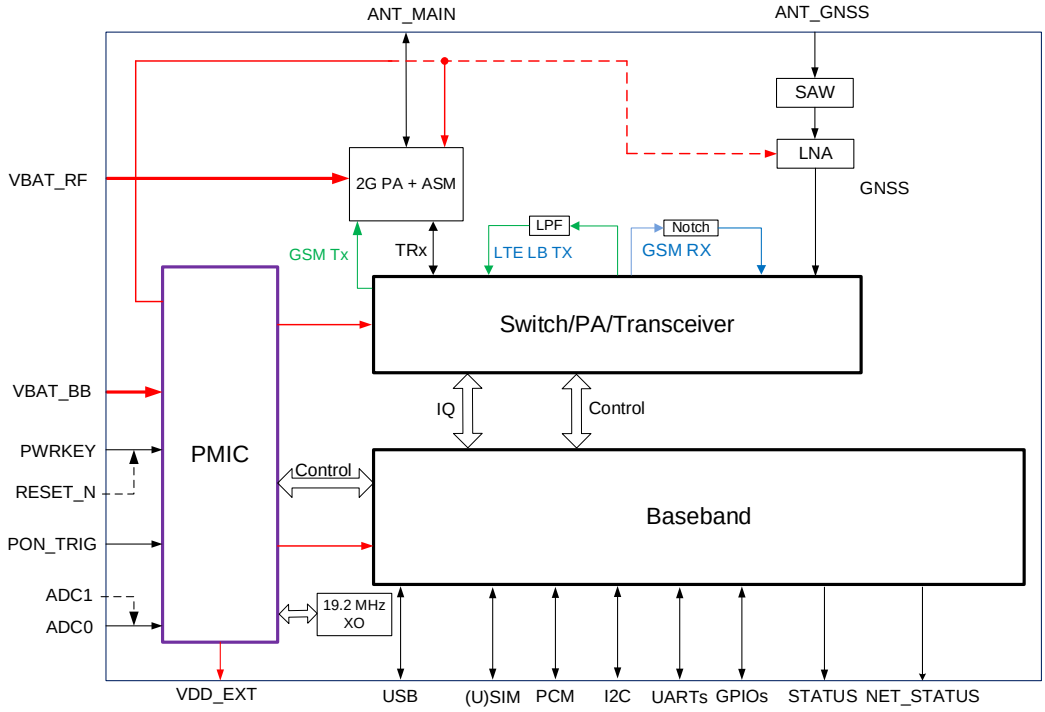

Figure 7: Functional Diagram of BG95-M8

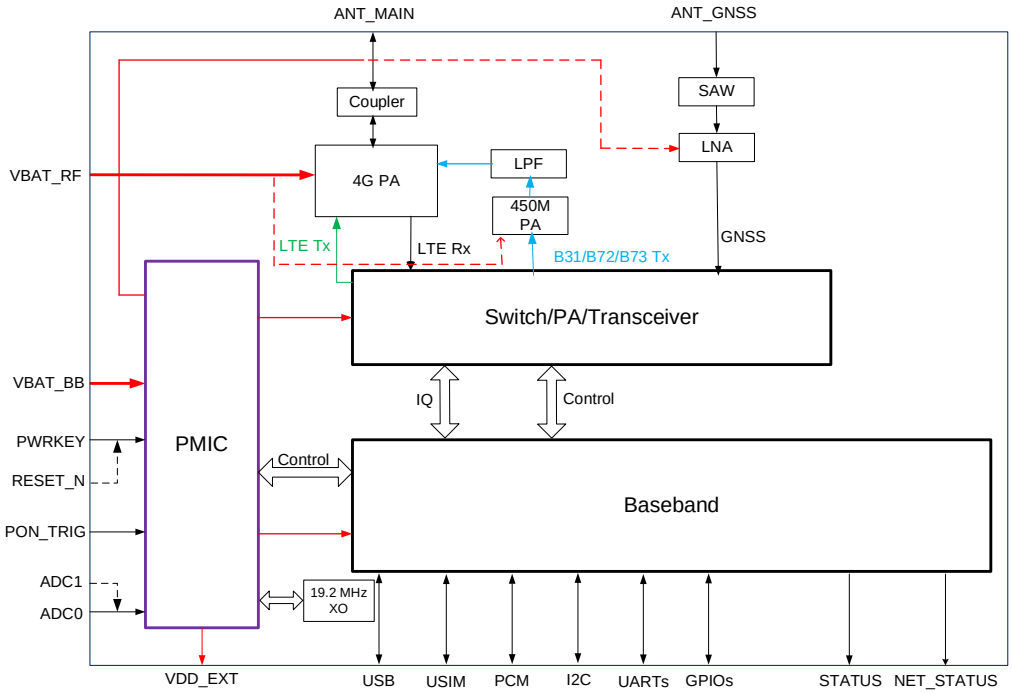

Figure 8: Functional Diagram of BG95-M9

NOTE

1. eSIM* function is optional. If eSIM is selected, then any external (U)SIM card cannot be used simultaneously. BG95-M5, BG95-M6, BG95-M8 and BG95-M9 do not support eSIM.
2. The output voltage of PWRKEY is 1.5 V because of the voltage drop inside the chipset. Due to platform limitations, the chipset has integrated the reset function into PWRKEY. Therefore, never pull down PWRKEY to GND permanently.
3. RESET_N connects directly to PWRKEY inside the module.
4. Do not use ADC0 and ADC1 simultaneously, as ADC1 connects directly to ADC0 inside the module. BG95 series supports the use of only one ADC interface at a time: either ADC0 or ADC1.

2.4. EVB Kit

To help you develop applications with the module, Quectel supplies an evaluation board (UMTS&LTE EVB) with accessories to develop or test the module. For more details, see ***document [2]***.

3 Application Interfaces

BG95 series is designed with 102 LGA pins for connection to various cellular application platforms. The subsequent chapters describe the interfaces listed below in detail:

- Power supply
- PON_TRIG Interface
- (U)SIM interface
- USB interface
- UART
- PCM and I2C interfaces
- Status indication interfaces
- MAIN_RI
- USB_BOOT
- ADC interfaces
- GPIO interfaces
- GRFC interfaces

3.1. Pin Assignment

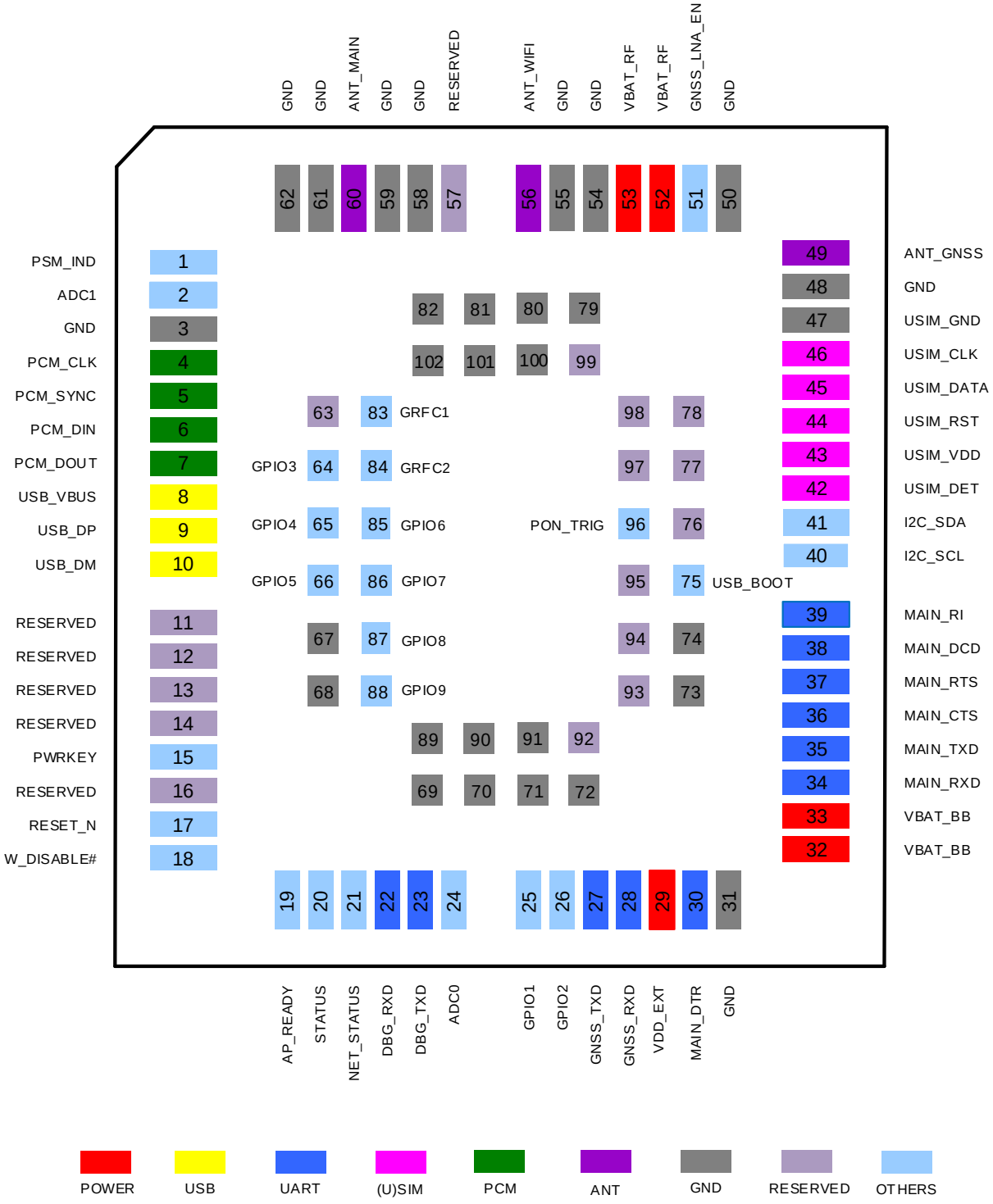

Figure 9: Pin Assignment (Top View)

NOTE

1. Only BG95-MF supports ANT_WIFI (pin 56).
2. BG95-MF does not support GPIO3 and GPIO4 interfaces (pin 64 and pin 65).
3. BG95-M4, BG95-M8 and BG95-M9 do not support GRFC interfaces (pin 83 and pin 84).
4. Do not use ADC0 and ADC1 simultaneously, as ADC1 connects directly to ADC0 inside the module. BG95 series supports the use of only one ADC interface at a time: either ADC0 or ADC1.
5. The output voltage of PWRKEY is 1.5 V because of the voltage drop inside the chipset. Due to platform limitations, the chipset has integrated the reset function into PWRKEY. Therefore, never pull down PWRKEY to GND permanently.
6. RESET_N connects directly to PWRKEY inside the module.
7. GNSS_TXD (pin 27), GRFC2 (pin 84) and GNSS_LNA_EN (pin 51) are BOOT_CONFIG pins. Never pull them up before startup, otherwise the module cannot power on normally.
8. GPIO1 (pin 25) supports fast shutdown function. This function is disabled by default. See ***Chapter 3.6.3*** for more details.
9. PCM and I2C interfaces are used for VoLTE or GSM CS voice.
10. Keep all RESERVED and unused pins unconnected.
11. Connect GND pins to the ground in the design.

3.2. Pin Description

Table 5: Definition of I/O Parameters

Type	Description
AI	Analog Input
AO	Analog Output
AIO	Analog Input/Output
DI	Digital Input
DIO	Digital Input/Output
DO	Digital Output
OD	Open Drain
PI	Power Input
PO	Power Output

DC characteristics include power domain and rate current.

Table 6: Pin Description

Power Supply					
Pin Name	**Pin No.**	**I/O**	**Description**	**DC Characteristics**	**Comment**
VBAT_BB	32, 33	PI	Power supply for the module's baseband part	**BG95-M1/-M2** [10]**:** Vmax = 4.8 V Vmin = 2.6 V Vnom = 3.3 V	
VBAT_RF	52, 53	PI	Power supply for the module's RF part	**BG95-M3/-M5/-M6/-MF/-M8** Vmax = 4.3 V Vmin = 3.3 V Vnom = 3.8 V **BG95-M4/-M9:** Vmax = 4.2 V Vmin = 3.2 V Vnom = 3.8 V	
VDD_EXT	29	PO	Provides 1.8 V for external circuits	Vnom = 1.8 V $I_O$max = 50 mA	If unused, keep this pin open.
GND	3, 31, 48, 50, 54, 55, 58, 59, 61, 62, 67–74, 79–82, 89–91, 100–102				
Turn-on/Turn-off the Module					
Pin Name	**Pin No.**	**I/O**	**Description**	**DC Characteristics**	**Comment**
PWRKEY	15	DI	Turn on/off the module	Vnom = 1.5 V V_{IL}max = 0.45 V	Never pull down PWRKEY to GND permanently. The output voltage is 1.5 V because of the voltage drop inside the chipset.
Reset the Module					
Pin Name	**Pin No.**	**I/O**	**Description**	**DC Characteristics**	**Comment**
RESET_N	17	DI	Reset the module	Vnom = 1.5 V V_{IL}max = 0.45 V	Multiplexed from PWRKEY (connects

[10] For every VBAT transition/re-insertion from 0 V, the minimum power supply voltage should be higher than 2.7 V. After the module starts up normally, the minimum safety voltage is 2.6 V. To ensure full functionality mode, the minimum power supply voltage should be higher than 2.8 V.

					directly to PWRKEY inside the module). If unused, keep it open.
Status Indication Interfaces					
Pin Name	**Pin No.**	**I/O**	**Description**	**DC Characteristics**	**Comment**
PSM_IND [11]	1	DO	Indicate the module's power saving mode	V_{OH}min = 1.35 V V_{OL}max = 0.45 V	1.8 V power domain. If unused, keep these pins open.
STATUS	20	DO	Indicate the module's operation status		
NET_STATUS	21	DO	Indicate the module's network activity status		
PON_TRIG Interface					
Pin Name	**Pin No.**	**I/O**	**Description**	**DC Characteristics**	**Comment**
PON_TRIG	96	DI	Wake up the module from PSM		1.8 V power domain. Rising-edge triggered. Pulled-down by default. If unused, keep this pin open.
USB Interface					
Pin Name	**Pin No.**	**I/O**	**Description**	**DC Characteristics**	**Comment**
USB_VBUS	8	AI	USB connection detect	Vmax = 5.25 V Vmin = 4.0 V Vnom = 5.0 V	Typical 5.0 V
USB_DP	9	AIO	USB differential data (+)		Compliant with USB 2.0 standard specification. Require differential impedance of 90 Ω.
USB_DM	10	AIO	USB differential data (-)		
(U)SIM Interface					
Pin Name	**Pin No.**	**I/O**	**Description**	**DC Characteristics**	**Comment**
USIM_DET	42	DI	(U)SIM card	V_{IL}min = -0.3 V	1.8 V power domain.

[11] When PSM is enabled, the function of PSM_IND pin will be activated after the module is rebooted. When PSM_IND is in high voltage level, the module is in full functionality mode. When it is in low voltage level, the module is in PSM.

			hot-plug detect	V_{IL}max = 0.6 V V_{IH}min = 1.2 V V_{IH}max = 2.0 V	If unused, keep this pin open.
USIM_VDD	43	PO	(U)SIM card power supply	Vmax = 1.9 V Vmin = 1.7 V	Only 1.8 V (U)SIM card is supported.
USIM_RST	44	DO	(U)SIM card reset	V_{OL}max = 0.45 V V_{OH}min = 1.35 V	1.8 V power domain.
USIM_DATA	45	DIO	(U)SIM card data	V_{IL}min = -0.3 V V_{IL}max = 0.6 V V_{IH}min = 1.2 V V_{IH}max = 2.0 V V_{OL}max = 0.45 V V_{OH}min = 1.35 V	1.8 V power domain.
USIM_CLK	46	DO	(U)SIM card clock	V_{OL}max = 0.45 V V_{OH}min = 1.35 V	1.8 V power domain.
USIM_GND	47		Specified ground for (U)SIM card		
Main UART					
Pin Name	**Pin No.**	**I/O**	**Description**	**DC Characteristics**	**Comment**
MAIN_DTR	30	DI	Main UART data terminal ready	V_{IL}min = -0.3 V V_{IL}max = 0.6 V V_{IH}min = 1.2 V V_{IH}max = 2.0 V	1.8 V power domain. If unused, keep these pins open.
MAIN_RXD	34	DI	Main UART receive		
MAIN_TXD	35	DO	Main UART transmit	V_{OL}max = 0.45 V V_{OH}min = 1.35 V	
MAIN_CTS	36	DO	Clear to send signal from the module		Connect to the MCU's CTS. 1.8 V power domain. If unused, keep the pin open.
MAIN_RTS	37	DI	Request to send signal to the module	V_{IL}min = -0.3 V V_{IL}max = 0.6 V V_{IH}min = 1.2 V V_{IH}max = 2.0 V	Connect to the MCU's RTS. 1.8 V power domain. If unused, keep the pin open.
MAIN_DCD	38	DO	Main UART data carrier detect	V_{OL}max = 0.45 V V_{OH}min = 1.35 V	1.8 V power domain. If unused, keep these pins open.
MAIN_RI	39	DO	Main UART ring indication		
Debug UART					

Pin Name	Pin No.	I/O	Description	DC Characteristics	Comment
DBG_RXD	22	DI	Debug UART receive	V_{IL}min = -0.3 V V_{IL}max = 0.6 V V_{IH}min = 1.2 V V_{IH}max = 2.0 V	1.8 V power domain. If unused, keep these pins open.
DBG_TXD	23	DO	Debug UART transmit	V_{OL}max = 0.45 V V_{OH}min = 1.35 V	
GNSS UART					
Pin Name	**Pin No.**	**I/O**	**Description**	**DC Characteristics**	**Comment**
GNSS_TXD	27	DO	GNSS UART transmit	V_{OL}max = 0.45 V V_{OH}min = 1.35 V	BOOT_CONFIG. Do not pull it up before startup. 1.8 V power domain. If unused, keep this pin open.
GNSS_RXD	28	DI	GNSS UART receive	V_{IL}min = -0.3 V V_{IL}max = 0.6 V V_{IH}min = 1.2 V V_{IH}max = 2.0 V	1.8 V power domain. If unused, keep this pin open.
PCM Interface [12]					
Pin Name	**Pin No.**	**I/O**	**Description**	**DC Characteristics**	**Comment**
PCM_CLK	4	DO	PCM clock	V_{OL}max = 0.45 V V_{OH}min = 1.35 V	1.8 V power domain. If unused, keep these pins open.
PCM_SYNC	5	DO	PCM data frame sync		
PCM_DIN	6	DI	PCM data input	V_{IL}min = -0.3 V V_{IL}max = 0.6 V V_{IH}min = 1.2 V V_{IH}max = 2.0 V	
PCM_DOUT	7	DO	PCM data output	V_{OL}max = 0.45 V V_{OH}min = 1.35 V	
I2C Interface [12]					
Pin Name	**Pin No.**	**I/O**	**Description**	**DC Characteristics**	**Comment**
I2C_SCL	40	OD	I2C serial clock (for external codec)		External pull-up resistor is required. 1.8 V only.

[12] PCM and I2C interfaces are used for VoLTE or GSM CS voice.

I2C_SDA	41	OD	I2C serial data (for external codec)		If unused, keep these pins open.
Antenna Interfaces					
Pin Name	**Pin No.**	**I/O**	**Description**	**DC Characteristics**	**Comment**
ANT_MAIN	60	AIO	Main antenna interface		50 Ω impedance
ANT_GNSS	49	AI	GNSS antenna interface		50 Ω impedance. If unused, keep this pin open.
ANT_WIFI [13]	56	AI	Wi-Fi antenna interface		50 Ω impedance. If unused or unsupported, keep this pin open.
GPIO Interfaces					
Pin Name	**Pin No.**	**I/O**	**Description**	**DC Characteristics**	**Comment**
GPIO1 [14]	25	DIO	General-purpose input/output	V_{OL}max = 0.45 V V_{OH}min = 1.35 V V_{IL}min = -0.3 V V_{IL}max = 0.6 V V_{IH}min = 1.2 V V_{IH}max = 2.0 V	1.8 V power domain. If unused, keep this pin open.
GPIO2	26				
GPIO3 [15]	64				
GPIO4 [15]	65				
GPIO5	66				
GPIO6	85				
GPIO7	86				
GPIO8	87				
GPIO9	88				
ADC Interfaces					
Pin Name	**Pin No.**	**I/O**	**Description**	**DC Characteristics**	**Comment**
ADC0	24	AI	General-purpose	Voltage range:	Do not use ADC0 and

[13] Only BG95-MF supports ANT_WIFI (pin 56).
[14] This pin is GPIO by default, which can be multiplexed into fast shutdown interface (see ***Chapter 3.6.3*** for details).
[15] BG95-MF does not support GPIO3 and GPIO4 interfaces (pin 64 and pin 65).

ADC1	2	AI	ADC interface	0.1–1.8 V	ADC1 simultaneously, as ADC1 connects directly to ADC0 inside the module. If unused, keep these pins open.
Other Interfaces					
Pin Name	**Pin No.**	**I/O**	**Description**	**DC Characteristics**	**Comment**
W_DISABLE#	18	DI	Airplane mode control	V_{IL}min = -0.3 V V_{IL}max = 0.6 V V_{IH}min = 1.2 V V_{IH}max = 2.0 V	1.8 V power domain. Pulled up by default. When it is in low voltage level, the module can enter airplane mode. If unused, keep this pin open.
AP_READY	19	DI	Application processor ready	V_{IL}min = -0.3 V V_{IL}max = 0.6 V V_{IH}min = 1.2 V V_{IH}max = 2.0 V	1.8 V power domain. If unused, keep this pin open.
USB_BOOT	75	DI	Force the module into emergency download mode		1.8 V power domain.
GNSS_LNA_EN [16]	51	DO	External LNA enable control	V_{OL}max = 0.45 V V_{OH}min = 1.35 V	BOOT_CONFIG. Do not pull it up before startup. 1.8 V power domain. If unused, keep this pin open.
GRFC Interfaces [17]					
Pin Name	**Pin No.**	**I/O**	**Description**	**DC Characteristics**	**Comment**
GRFC1	83	DO	Generic RF controller	V_{OL}max = 0.45 V V_{OH}min = 1.35 V	1.8 V power domain. If unused, keep this pin open.
GRFC2	84				BOOT_CONFIG. Do not pull it up before startup. 1.8 V power domain. If unused, keep this pin open.

[16] Only BG95-M4/-MF supports GNSS_LNA_EN (pin 51).
[17] BG95-M4, BG95-M8 and BG95-M9 does not support GRFC interfaces (pin 83 and pin 84).

RESERVED Pins		
Pin Name	**Pin No.**	**Comment**
RESERVED	11–14, 16, 57, 63, 76–78, 92–95, 97–99	Keep these pins open.

3.3. Operating Modes

Table 7: Operating Modes of BG95 Series Module

Mode	Details	
Full Functionality Mode	Connected	The module connects to network. Its power consumption varies with the network setting and data transfer rate.
	Idle	The module remains registered on network, and is ready to send and receive data. In this mode, the software is active.
Extended Idle Mode DRX (e-I-DRX)	The module and the network may negotiate over non-access stratum signaling the use of e-I-DRX for reducing power consumption, while being available for mobile terminating data and/or network originated procedures within a certain delay dependent on the DRX cycle value.	
Airplane Mode	**AT+CFUN=4** or W_DISABLE# pin can set the module into airplane mode where the RF function is invalid.	
Minimum Functionality Mode	**AT+CFUN=0** can set the module into a minimum functionality mode without removing the power supply. In this mode, both RF function and (U)SIM card are invalid.	
Sleep Mode	The module remains the ability to receive paging message, SMS and TCP/UDP data from the network normally. In this mode, the power consumption reduces to a low level.	
Power OFF Mode	The module's power supply is shut down by its power management unit. In this mode, the software is inactive, the serial interfaces are inaccessible, while the operating voltage (connected to VBAT_RF and VBAT_BB) remains applied.	
Power Saving Mode (PSM)	PSM is similar to power-off, but the module remains registered on the network and there is no need to re-attach or re-establish PDN connections. The power consumption reduces to a minimized level.	

NOTE

During e-I-DRX, it is recommended to use UART for data communication, as the use of USB interface increases power consumption.

3.4. Power Saving

3.4.1. Airplane Mode

When the module enters airplane mode, the RF function does not work, and all AT commands correlative with RF function are inaccessible. This mode can be set via the following methods.

Hardware:

W_DISABLE# is pulled up by default. Driving it low makes the module enter airplane mode.

Software:

AT+CFUN=<fun> provides choice of the functionality level via setting **<fun>** to 0, 1 or 4.

- **AT+CFUN=0**: Minimum functionality mode. Both (U)SIM and RF functions are disabled.
- **AT+CFUN=1**: Full functionality mode (by default).
- **AT+CFUN=4**: Airplane mode. RF function is disabled.

NOTE

1. Airplane mode control via W_DISABLE# is disabled in firmware by default. It can be enabled by **AT+QCFG="airplanecontrol"**. For details of the command, see ***document [4]***.
2. The execution of **AT+CFUN** (see ***document [3]***) will not affect GNSS function.

3.4.2. Power Saving Mode (PSM)

The module minimizes its power consumption through entering PSM. PSM mode is similar to power-off, but the module remains registered on the network and there is no need to re-attach or re-establish PDN connections. Therefore, the module in PSM cannot immediately respond to your requests.

When the module wants to use the PSM, it shall request an Active Time value during every Attach and TAU procedures. If the network supports PSM and accepts that the module uses PSM, the network confirms usage of PSM by allocating an Active Time value to the module. If the module wants to change the Active Time value, e.g., the module requests the value it wants in the TAU procedure.

If PSM is supported by the network, then it can be enabled via **AT+CPSMS**. See ***document [3]*** for details about the AT command.

Any of the following methods can wake up the module from PSM:

- Wake up the module from PSM through a rising edge on PON_TRIG. (Recommended)
- Wake up the module by driving PWRKEY low.
- When the TAU timer expires, the module wakes up from PSM automatically.

3.4.3. Extended Idle Mode DRX (e-I-DRX)

The module (UE) and the network may negotiate over non-access stratum signalling the use of e-I-DRX for reducing its power consumption, while being available for mobile terminating data and/or network originated procedures within a certain delay dependent on the DRX cycle value.

Applications that want to use e-I-DRX need to consider specific handling of mobile terminating services or data transfers, and in particular they need to consider the delay tolerance of mobile terminated data.

In order to negotiate the use of e-I-DRX, the UE requests e-I-DRX parameters during attach procedure and RAU/TAU procedure. The EPC may reject or accept the UE request for enabling e-I-DRX. In case the EPC accepts e-I-DRX, the EPC based on operator policies and, if available, the e-I-DRX cycle length value in the subscription data from the HSS, may also provide different values of the e-I-DRX parameters than what were requested by the UE. If the EPC accepts the use of e-I-DRX, the UE applies e-I-DRX based on the received e-I-DRX parameters. If the UE does not receive e-I-DRX parameters in the relevant accept message because the EPC rejected its request or because the request was received by EPC not supporting e-I-DRX, the UE shall apply its regular discontinuous reception.

If e-I-DRX is supported by the network, then it can be enabled by **AT+CEDRXS=1**. See ***document [3]*** for details about the AT command.

3.4.4. Sleep Mode

The module reduces its current consumption to a low level during sleep mode. The following sub-chapters describe the power saving procedure of the module.

3.4.4.1. UART Application

If the MCU communicates with the module via UART, the following preconditions enable the module to enter sleep mode.

- Execute **AT+QSCLK=1** (see ***document [3]***) to enable sleep mode.
- Drive MAIN_DTR high.

The following figure shows the connection between the module and the MCU.

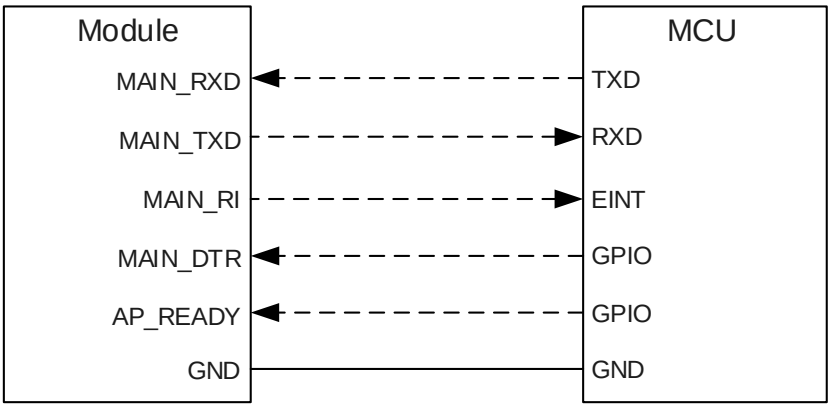

Figure 10: Sleep Mode Application via UART

- When the module has a URC to report, MAIN_RI will wake up the MCU. See ***Chapter 3.15*** for details about MAIN_RI behavior.
- Driving MAIN_DTR low will wake up the module.
- AP_READY detects the sleep state of the MCU (can be configured into high-level or low-level detection). See **AT+QCFG="apready"** in ***document [4]*** for details.

3.5. Power Supply

3.5.1. Power Supply Pins

BG95 series provides the following four VBAT pins for connection with an external power supply. There are two separate voltage domains for VBAT.

- Two VBAT_RF pins for the module's RF part.
- Two VBAT_BB pins for the module's baseband part.

Table 8: VBAT and GND Pins

Pin Name	Pin No.	IO	Description	Module	Min.	Typ.	Max.	Unit
VBAT_RF	52, 53	PI	Power supply for the module's RF part	BG95-M1/-M2	2.6	3.3	4.8	V
				BG95-M3/-M5/-M6/-MF/-M8	3.3	3.8	4.3	V
				BG95-M4/-M9	3.2	3.8	4.2	V

VBAT_BB	32, 33	PI	Power supply for the module's baseband part	BG95-M1/-M2	2.6	3.3	4.8	V
				BG95-M3/-M5/-M6/-MF/-M8	3.3	3.8	4.3	V
				BG95-M4/-M9	3.2	3.8	4.2	V
GND	3, 31, 48, 50, 54, 55, 58, 59, 61, 62, 67–74, 79–82, 89–91, 100–102							

3.5.2. Voltage Stability Requirements

- **BG95-M1/-M2:**
  The power supply range of BG95-M1/-M2 is 2.6–4.8 V. For every VBAT transition/re-insertion from 0 V, the minimum power supply voltage should be higher than 2.7 V. After the module starts up normally, the minimum safety voltage is 2.6 V. To ensure full functionality mode, the minimum power supply voltage should be higher than 2.8 V. Make sure that the input voltage never drops below 2.6 V.

- **BG95-M3/-M5/-M6/-MF/-M8:**
  The power supply range of BG95-M3/-M5/-M6/-MF/-M8 is 3.3–4.3 V. Ensure the input voltage never drops below 3.3 V.

- **BG95-M4/-M9:**
  The power supply range of BG95-M4/-M9 is 3.2–4.2 V. Ensure the input voltage never drops below 3.2 V.

The following figure shows the voltage drop during burst transmission in 2G network of BG95-M3/-M5/-M8. The voltage drop is less in LTE Cat M1 and/or LTE Cat NB2 networks.

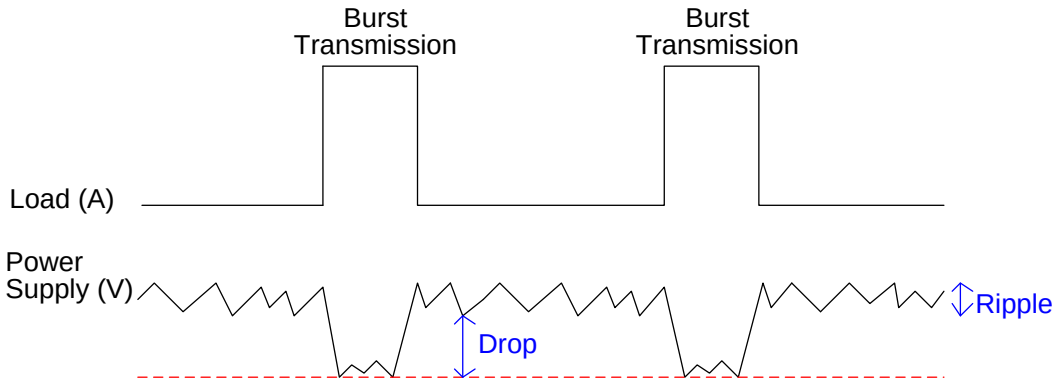

Figure 11: Power Supply Limits During Burst Transmission (BG95-M3/-M5/-M8)

To decrease voltage-drop, bypass capacitors of about 100 µF with low ESR should be used, and multi-layer ceramic chip capacitor (MLCC) arrays should also be reserved due to their low ESR. Use seven ceramic capacitors (220 nF, 47 nF, 150 pF, 100 pF, 68 pF, 33 pF, 10 pF) to compose the MLCC array for VBAT_BB, three ceramic capacitors (100 nF, 33 pF, 10 pF) to compose the MLCC array for VBAT_RF, and place these capacitors close to VBAT pins. The main power supply from an external application has to be a single voltage source and can be expanded to two sub paths with star structure. The width of VBAT_BB trace should be not less than 0.6 mm, and the width of VBAT_RF trace should be not less than 2.7 mm. The longer the VBAT trace is, the wider it should be.

To get a stable power source, it is suggested to use two TVS components with low leakage current and suitable reverse stand-off voltage, and it is recommended to place them as close as possible to the VBAT pins.

In addition, route VBAT_BB and VBAT_RF traces in inner-layer of the PCB, and place a ferrite bead as close to VBAT_BB as possible. Follow the criteria below for ferrite bead selection:

- Current rating ≥ 600 mA and low DC resistance to avoid voltage drop during instantaneous high power consumption.
- ≥ 800 Ω impedance @ 700–960 MHz.

The following figure shows the star structure of the power supply.

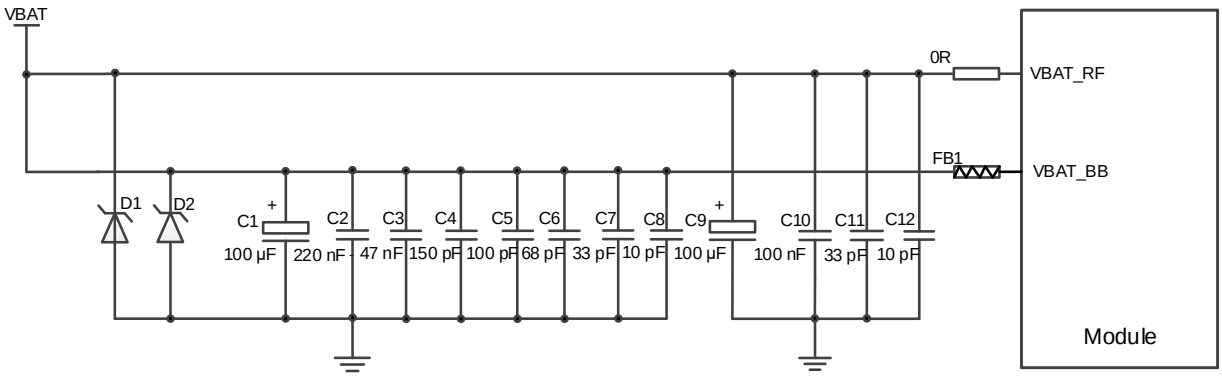

Figure 12: Star Structure of the Power Supply

If only LTE Cat M1 and/or Cat NB2 networks are used, it is recommended to select a DC-DC converter chip or LDO chip with ultra-low leakage current and current output not less than 1.0 A for the power supply design.

If LTE Cat M1, Cat NB2 and EGPRS networks are all used, the current output of DC-DC converter chip or LDO chip should exceed 2.7 A and power supply chips with low leakage current should be adopted because the module needs higher current in GSM network data transmission. Only BG95-M3, BG95-M5 and BG95-M8 support GSM network. For more details about supported bands of each module model, see ***Table 3***.

3.5.3. Power Supply Voltage Monitoring

AT+CBC monitors the VBAT_BB voltage value. For more details, see ***document [3]***.

3.6. Turn On and Turn Off

3.6.1. Turn On with PWRKEY

Table 9: Pin Definition of PWRKEY

Pin Name	Pin No.	I/O	Description	Comment
PWRKEY	15	DI	Turn on/off the module	Never pull down PWRKEY to GND permanently. The output voltage is 1.5 V because of the voltage drop inside the chipset.

The module can be turned on by driving PWRKEY low for 500–1000 ms. It is recommended to use an open drain/collector driver to control the PWRKEY.

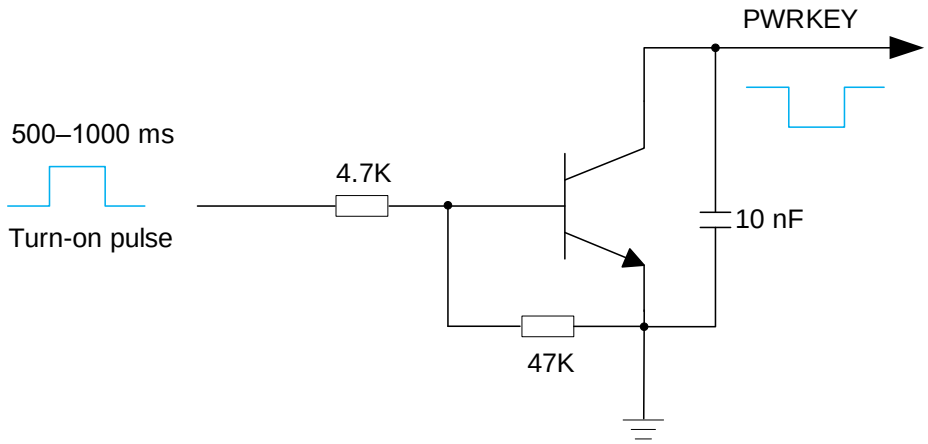

Figure 13: Turn On the Module with a Driver Circuit

Another way to control the PWRKEY is using a push button. As electrostatic strike may be generated from the finger touching when the button is pressed, a TVS component is indispensable to be placed near the button for ESD protection. A reference circuit is illustrated in the following figure.

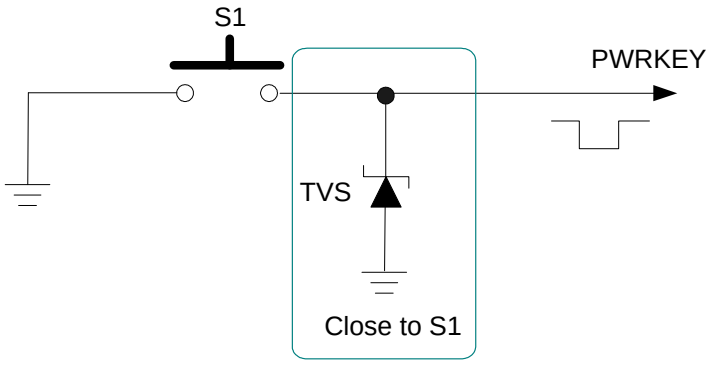

Figure 14: Turn On the Module with a Push Button

The power-up timing is illustrated in the following figure.

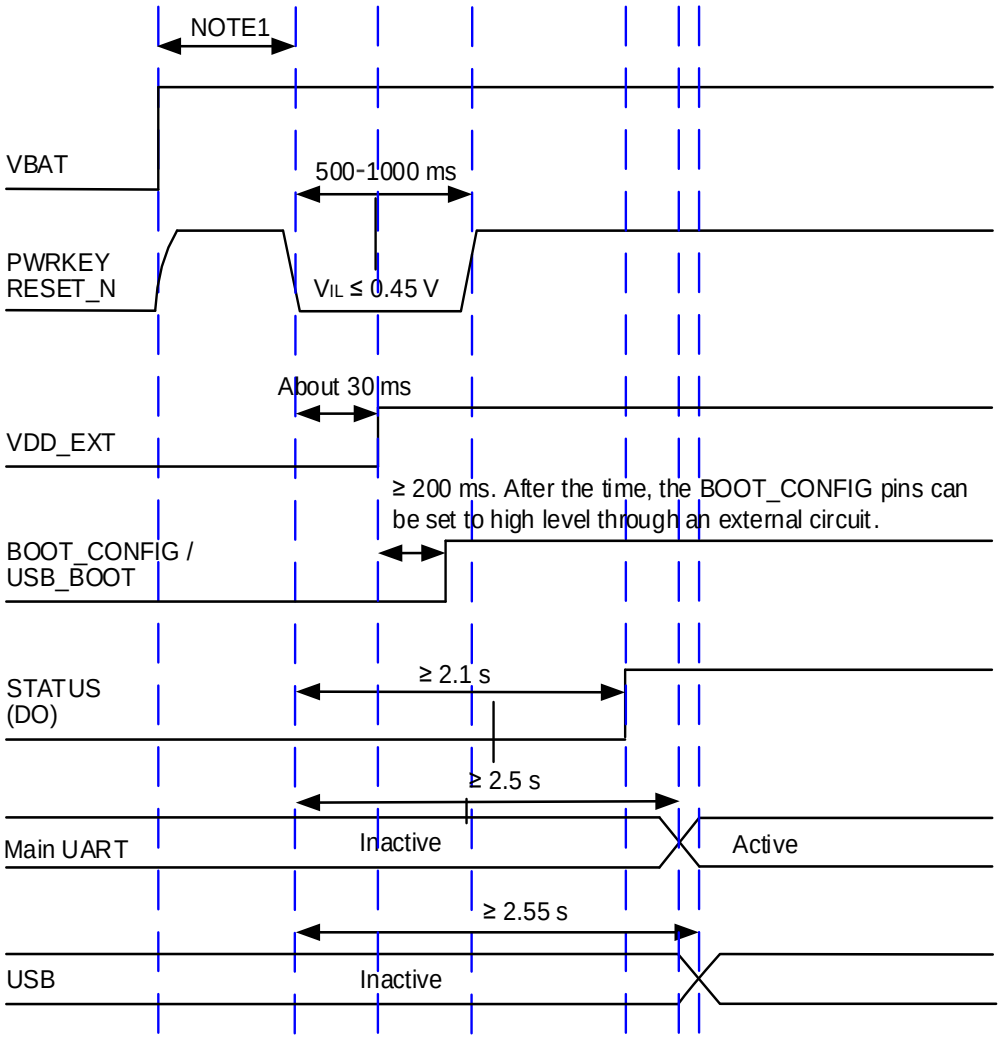

Figure 15: Power-up Timing

NOTE

1. Ensure that VBAT is stable before pulling down PWRKEY and keep the interval not less than 30 ms.
2. The output voltage of PWRKEY is 1.5 V because of the voltage drop inside the chipset. Due to platform limitations, the chipset has integrated the reset function into PWRKEY. Therefore, never pull down PWRKEY to GND permanently.

3.6.2. Turn Off

Either of the following methods can be used to turn off the module:

- with PWRKEY
- with **AT+QPOWD**

3.6.2.1. Turn Off with PWRKEY

Driving PWRKEY low for 650–1500 ms and then releasing it, the module will execute power-down procedure.

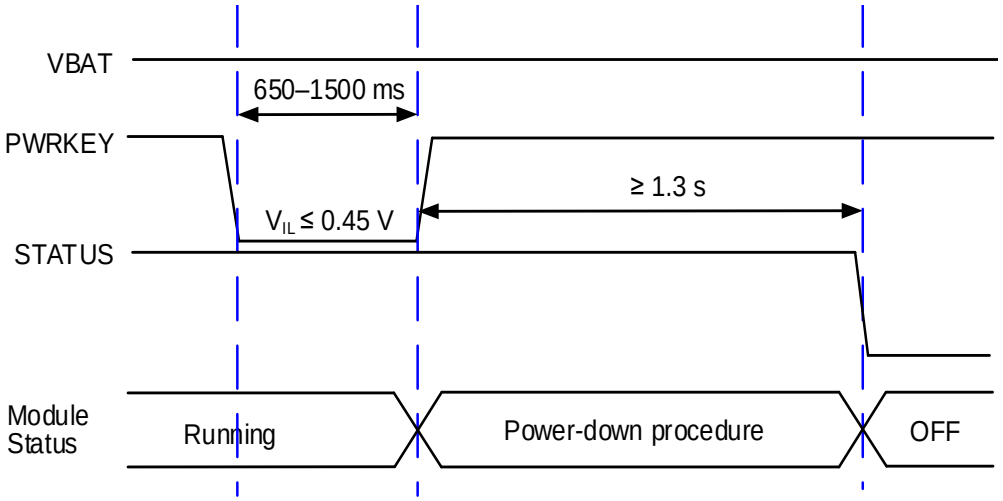

Figure 16: Power-down Timing

3.6.2.2. Turn Off with AT Command

It is also a safe way to execute **AT+QPOWD** to turn off the module, which is similar to turning off the module with PWRKEY. See ***document [3]*** for details about **AT+QPOWD**.

NOTE

1. To avoid corrupting the data in the internal flash, do not switch off the power supply when the module is working. Only after the module is shut down with PWRKEY, fast shutdown function or AT command can the power supply be cut off.
2. While turning off the module with AT command, keep PWRKEY at high level after the execution of turn-off command, otherwise the module will be turned on again after it turns off.
3. It is recommended to judge whether the module has been shut down based on the state of STATUS.

3.6.3. Fast Shutdown

The module supports fast shutdown function through GPIO1 (pin 25). When the pin detects a falling edge, the module powers off within 100 ms without damaging the file system, but the writing data may be lost. Fast shutdown is disabled by default.

For more details, see **AT+QCFG="fast/poweroff"** in ***document [4]***.

Table 10: Pin Definition of Fast Shutdown Interface

Pin Name	Pin No.	I/O	Description	Comment
GPIO1 [18]	25	DI	When the pin detects a falling edge, the module powers off	Falling-edge triggered. Pulled-up by default. 1.8 V power domain.

[18] Pin 25 is a general-purpose IO by default. It can be multiplexed into fast shutdown interface with **AT+QCFG="fast/poweroff"**.

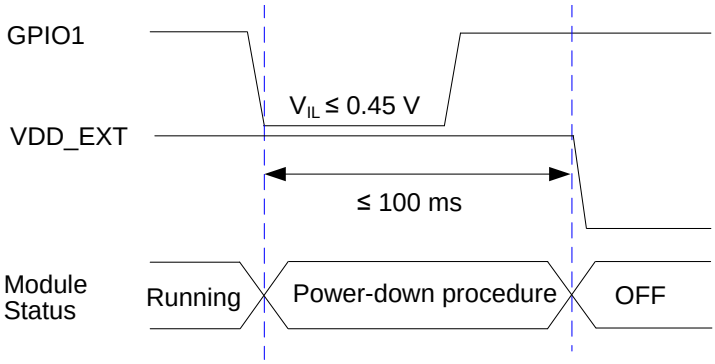

Figure 17: Fast Shutdown Timing

3.7. Reset

RESET_N works to reset the module. Due to platform limitations, the chipset has integrated the reset function into PWRKEY, and RESET_N connects directly to PWRKEY inside the module.

Table 11: Pin Definition of RESET_N

Pin Name	Pin No.	I/O	Description	Comment
RESET_N	17	DI	Reset the module	Multiplexed from PWRKEY.

The module can be reset by driving RESET_N low for 2–3.8 s.

The recommended circuit is similar to the PWRKEY control circuit. An open drain/collector driver or a button can be used to control RESET_N.

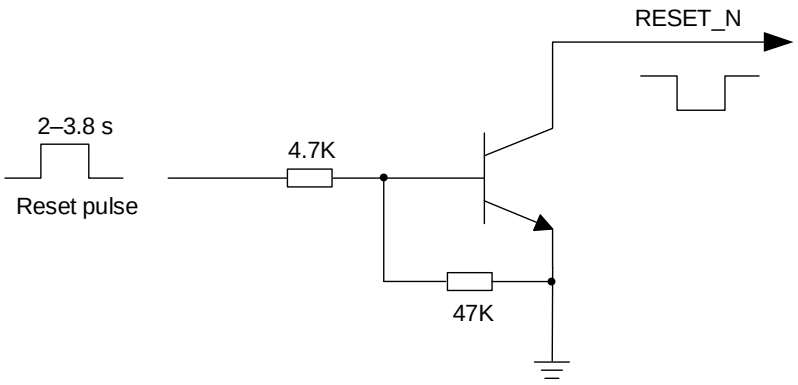

Figure 18: Reference Design of RESET_N with a Driver Circuit

Another way to control the RESET_N is to use a push button.

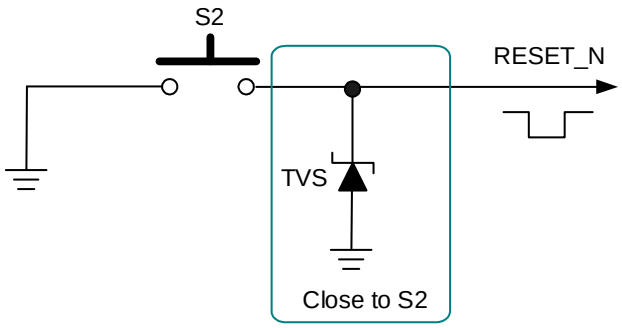

Figure 19: Reference Design of RESET_N with a Push Button

The reset timing is illustrated in the following figure.

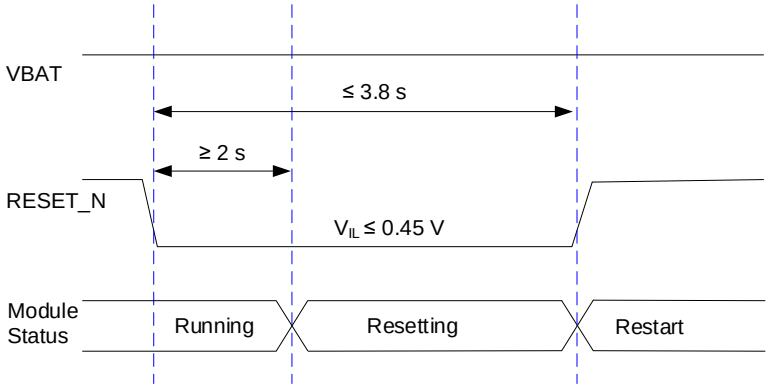

Figure 20: Reset Timing

NOTE

Ensure that there is no large capacitance on RESET_N.

3.8. PON_TRIG Interface

The module provides one PON_TRIG pin which is used to wake up the module from PSM. When the pin detects a rising edge and keeps at high level for at least 30 ms, the module wakes up from PSM.

Table 12: Pin Definition of PON_TRIG Interface

Pin Name	Pin No.	I/O	Description	Comment
PON_TRIG	96	DI	Wake up the module from PSM	Rising-edge triggered. Pulled-down by default. 1.8 V power domain. If unused, keep this pin open.

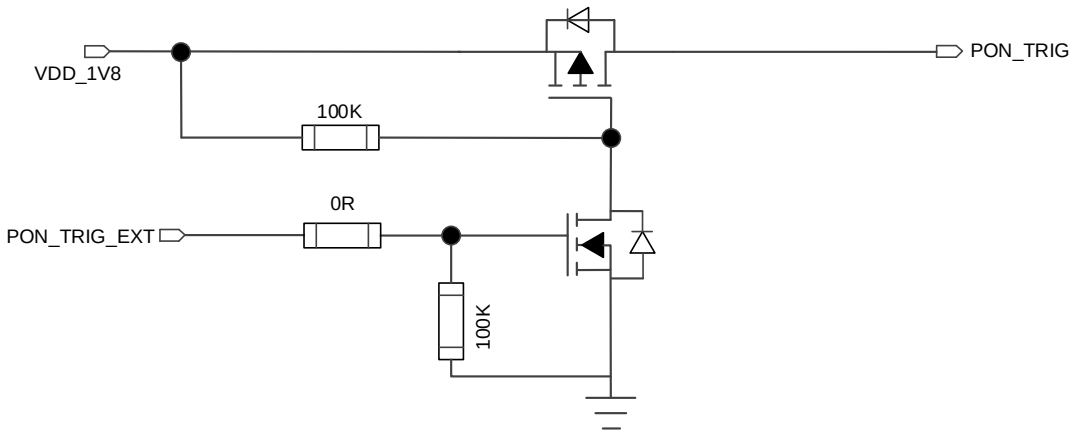

Figure 21: Reference Design of PON_TRIG

NOTE

VDD_1V8 is provided by an external LDO.

3.9. (U)SIM Interface

The module supports 1.8 V (U)SIM card only. The (U)SIM interface circuit meets ETSI and IMT-2000 requirements.

Table 13: Pin Definition of (U)SIM Interface

Pin Name	Pin No.	I/O	Description	Comment
USIM_DET	42	DI	(U)SIM card hot-plug detect	1.8 V power domain. If unused, keep this pin open.
USIM_VDD	43	PO	(U)SIM card power supply	Only 1.8 V (U)SIM card is

				supported.
USIM_RST	44	DO	(U)SIM card reset	1.8 V power domain.
USIM_DATA	45	DIO	(U)SIM card data	
USIM_CLK	46	DO	(U)SIM card clock	
USIM_GND	47		Specified ground for (U)SIM card	

The module supports (U)SIM card hot-plug via the USIM_DET pin, and both high-level and low-level detections are supported. The function is disabled by default, and see **AT+QSIMDET** in ***document [3]*** for more details.

The following figure shows a reference design of (U)SIM interface with an 8-pin (U)SIM card connector.

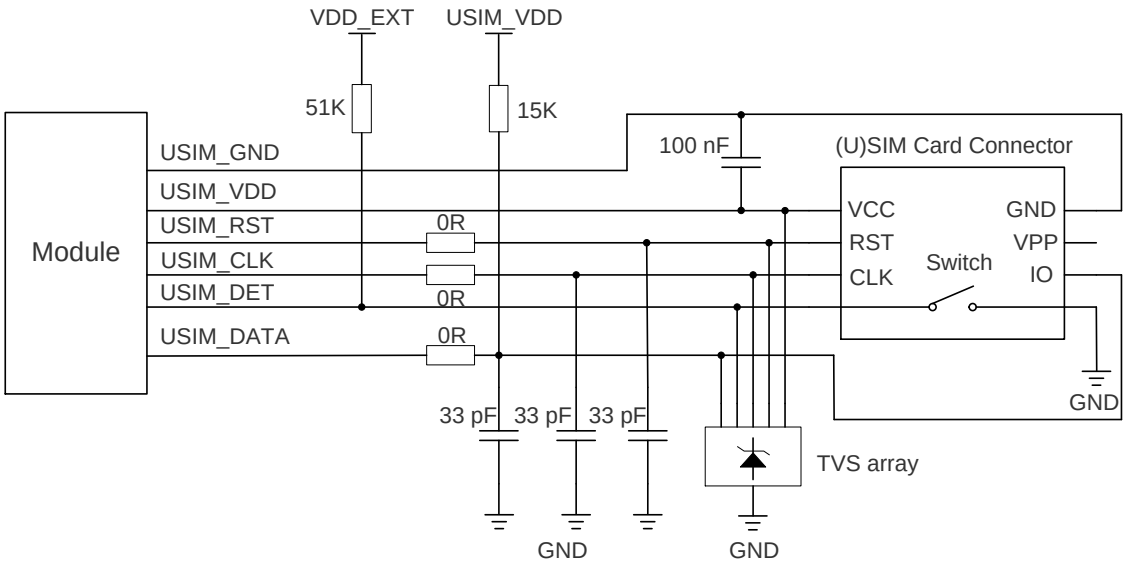

Figure 22: Reference Design of (U)SIM Interface with an 8-Pin (U)SIM Card Connector

If (U)SIM card detection function is not needed, keep USIM_DET unconnected. A reference circuit for (U)SIM interface with a 6-pin (U)SIM card connector is illustrated in the following figure.

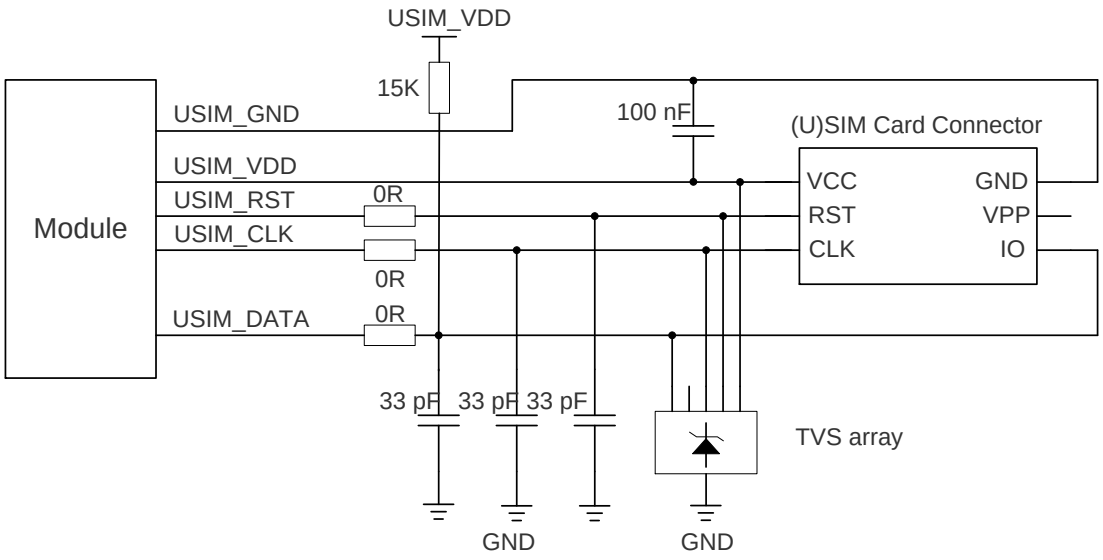

Figure 23: Reference Design of (U)SIM Interface with a 6-Pin (U)SIM Card Connector

To enhance the reliability and availability of the (U)SIM card in applications, follow the criteria below in (U)SIM circuit design:

- Keep the placement of (U)SIM card connector as close to the module as possible. Keep the trace length as short as possible, at most 200 mm.
- Keep (U)SIM card signals away from RF and power supply traces.
- Assure the ground trace between the module and the (U)SIM card connector short and wide. Keep the trace width of ground and USIM_VDD not less than 0.5 mm to maintain the same electric potential. Make sure the bypass capacitor between USIM_VDD and USIM_GND is less than 1 μF, and place it as close to (U)SIM card connector as possible. If the system ground plane is complete, USIM_GND can be connected to the system ground directly.
- To avoid crosstalk between USIM_DATA and USIM_CLK, keep them away from each other and shield them with surrounded ground. USIM_RST should also be surrounded with ground.
- To offer good ESD protection, it is recommended to add a TVS array with parasitic capacitance not exceeding 15 pF. To facilitate debugging, it is recommended to reserve series resistors for the (U)SIM signals of the module. The 33 pF capacitors are used for RF filtering interference. Note that the (U)SIM peripheral circuit should be close to the (U)SIM card connector.
- The pull-up resistor on USIM_DATA trace can improve anti-jamming capability when long layout trace and sensitive occasion are applied, and should be placed close to the (U)SIM card connector.

NOTE

1. eSIM* function is optional. If eSIM is selected, then the external (U)SIM card cannot be used simultaneously.
2. BG95-M5, BG95-M6, BG95-M8 and BG95-M9 do not support eSIM.

3.10. USB Interface

The module provides one integrated Universal Serial Bus (USB) interface which complies with the USB 2.0 specification and supports operation at low-speed (1.5 Mbps), full-speed (12 Mbps) and high-speed (480 Mbps) modes.

The USB interface is used for AT command communication, data transmission[19], GNSS NMEA sentences output, software debugging and firmware upgrade. The following table shows the pin definition of USB interface.

Table 14: Pin Definition of USB Interface

Pin Name	Pin No.	I/O	Description	Comment
USB_VBUS	8	AI	USB connection detect	Typical 5.0 V
USB_DP	9	AIO	USB differential data (+)	Require differential impedance of 90 Ω.
USB_DM	10	AIO	USB differential data (-)	
GND	3		Ground	

For more details about USB 2.0 specification, visit https://www.usb.org/home.

The USB interface is recommended to be reserved for firmware upgrade and software debugging in application designs. The following figure shows a reference design of USB interface.

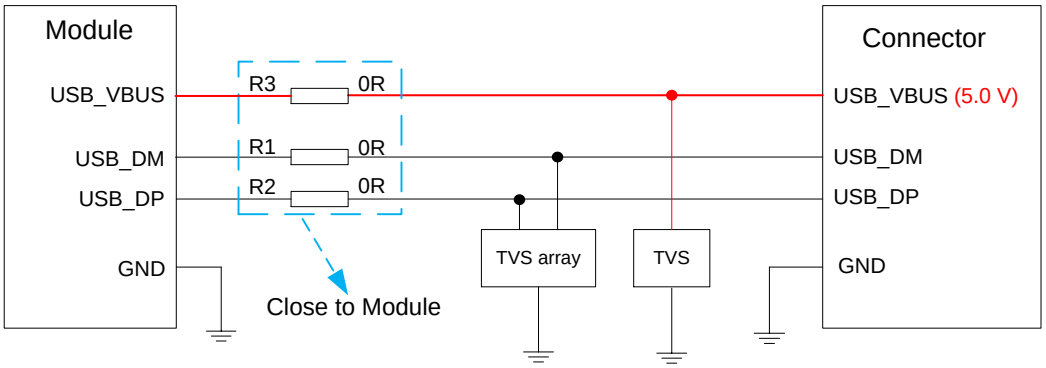

Figure 24: Reference Design of USB Interface

To ensure the integrity of USB data trace signal, resistors should be placed close to the module, and also

[19] It is not recommended to use USB for data communication, as this will increase the power consumption.

these resistors should be placed close to each other. The extra stubs of trace must be as short as possible.

To meet USB 2.0 specification, comply with the following principles while designing the USB interface.

- It is important to route the USB signal traces as differential pairs with ground surrounded. The impedance of USB differential trace is 90 Ω.
- Do not route signal traces under crystals, oscillators, magnetic devices and RF signal traces. It is important to route the USB differential traces in inner-layer of the PCB, and surround the traces with ground on that layer and with ground planes above and below.
- Junction capacitance of the ESD protection components might cause influences on USB data traces, so pay attention to the selection of the components. Typically, the stray capacitance should be less than 2 pF.
- Keep TVS components as close to the USB connector as possible.

NOTE

The USB interface supports slave mode only.

3.11. UART

The module provides three UART: the main UART, debug UART and the GNSS UART. Their features are outlined below:

- The main UART supports 9600, 19200, 38400, 57600, 115200, 230400, 460800 and 921600, 2000000, 2900000, 3000000, 3200000, 3686400, 4000000 bps baud rates, and the default baud rate is 115200 bps. It is used for data transmission and AT command communication, and supports RTS and CTS hardware flow control. The default frame format is 8N1 (8 data bits, no parity, 1 stop bit).
- The debug UART supports a fixed baud rate of 115200 bps, and is used for software debugging and log output.
- The GNSS UART supports 115200 bps baud rate by default, and is used for GNSS data and NMEA sentences output.

Table 15: Pin Definition of Main UART

Pin Name	Pin No.	I/O	Description	Comment
MAIN_DTR	30	DI	Main UART data terminal ready	1.8 V power domain. If unused, keep these pins open.
MAIN_RXD	34	DI	Main UART receive	

MAIN_TXD	35	DO	Main UART transmit	
MAIN_CTS	36	DO	Clear to send signal from the module	Connect to the MCU's CTS. 1.8 V power domain. If unused, keep the pin open.
MAIN_RTS	37	DI	Request to send signal to the module	Connect to the MCU's RTS. 1.8 V power domain. If unused, keep the pin open.
MAIN_DCD	38	DO	Main UART data carrier detect	1.8 V power domain. If unused, keep these pins open.
MAIN_RI	39	DO	Main UART ring indication	

NOTE

AT+IPR can be used to set the baud rate of the main UART, and **AT+IFC** can be used to enable/disable the hardware flow control (the function is disabled by default). See ***document [3]*** for more details about these AT commands.

Table 16: Pin Definition of Debug UART

Pin Name	Pin No.	I/O	Description	Comment
DBG_RXD	22	DI	Debug UART receive	1.8 V power domain. If unused, keep these pins open.
DBG_TXD	23	DO	Debug UART transmit	

Table 17: Pin Definition of GNSS UART

Pin Name	Pin No.	I/O	Description	Comment
GNSS_TXD	27	DO	GNSS UART transmit	BOOT_CONFIG. Do not pull it up before startup. 1.8 V power domain. If unused, keep this pin open.
GNSS_RXD	28	DI	GNSS UART receive	1.8 V power domain. If unused, keep this pin open.

NOTE

GNSS_TXD is a BOOT_CONFIG pin. Never pull it up before startup, otherwise the module cannot power up normally.

The module provides 1.8 V UART. A voltage-level translator should be used if your application is equipped with a 3.3 V UART. The voltage-level translator TXS0108EPWR provided by Texas Instruments is recommended.

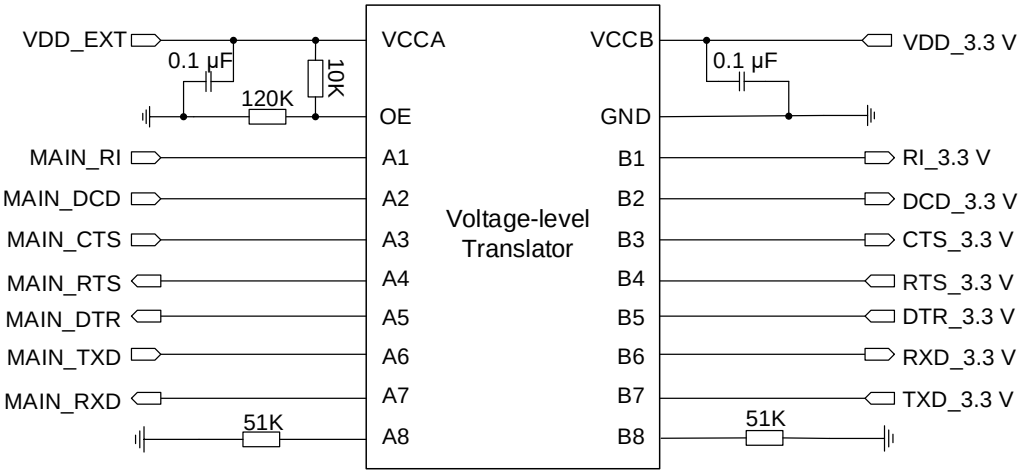

Figure 25: Main UART Reference Design (IC Solution)

Visit http://www.ti.com/ for more information.

Another example with transistor translation circuit is shown as below. For the design of circuits shown in dotted lines, refer to the solid lines, but pay attention to the direction of connection.

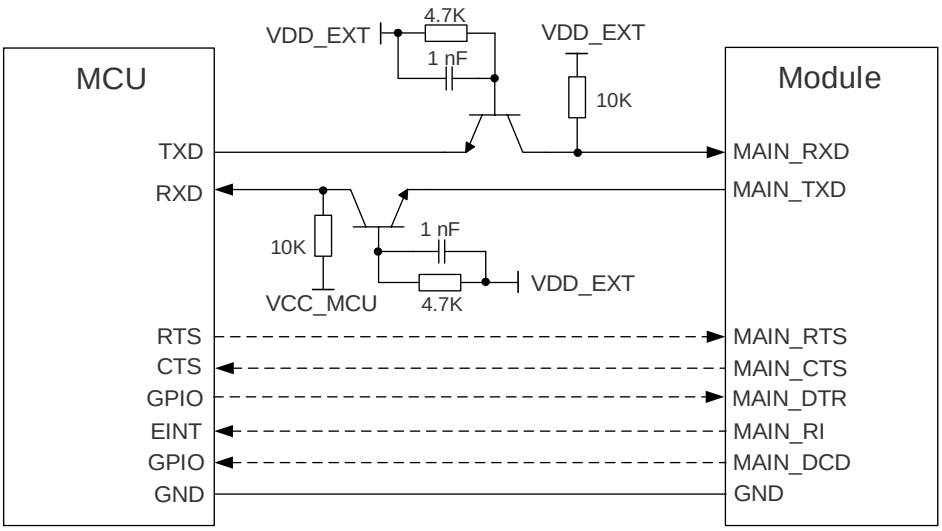

Figure 26: Main UART Reference Design (Transistor Solution)

NOTE

1. Transistor circuit solution is not suitable for applications with high baud rates exceeding 460 kbps.
2. Please note that the module's CTS is connected to the MCU's CTS, and the module's RTS is connected to the MCU's RTS.
3. The level shifting circuit of debug UART and GNSS UART is similar to main UART.

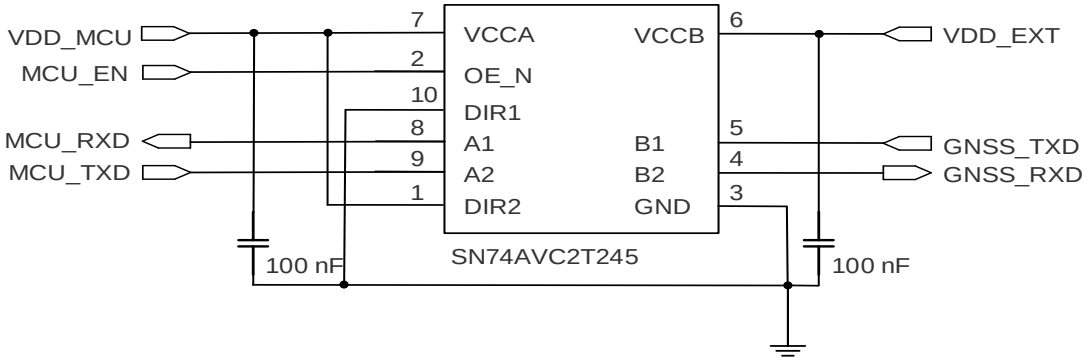

Figure 27: GNSS UART Reference Design (IC Solution Without Internal Pull-up)

NOTE

GNSS_TXD is a BOOT_CONFIG pin (pin 27), therefore the IC solution with pull-up circuit or transistor/MOSFET circuit is not applicable. It is recommended to adopt an IC solution without internal pull-up.

3.12. PCM and I2C Interfaces

The module provides one Pulse Code Modulation (PCM) digital interface and one inter-integrated circuit (I2C) interface which are used for VoLTE or GSM CS voice.

The following table shows the pin definition of the two interfaces which can be applied to audio codec design.

Table 18: Pin Definition of PCM and I2C Interfaces

Pin Name	Pin No.	I/O	Description	Comment
PCM_CLK	4	DO	PCM clock	1.8 V power domain. If unused, keep these pins open.
PCM_SYNC	5	DO	PCM data frame sync	
PCM_DIN	6	DI	PCM data input	
PCM_DOUT	7	DO	PCM data output	
I2C_SCL	40	OD	I2C serial clock (for external codec)	External pull-up resistors are required. 1.8 V only. If unused, keep these pins open.
I2C_SDA	41	OD	I2C serial data (for external codec)	

The following figure shows a reference design of PCM and I2C interfaces with an external codec IC.

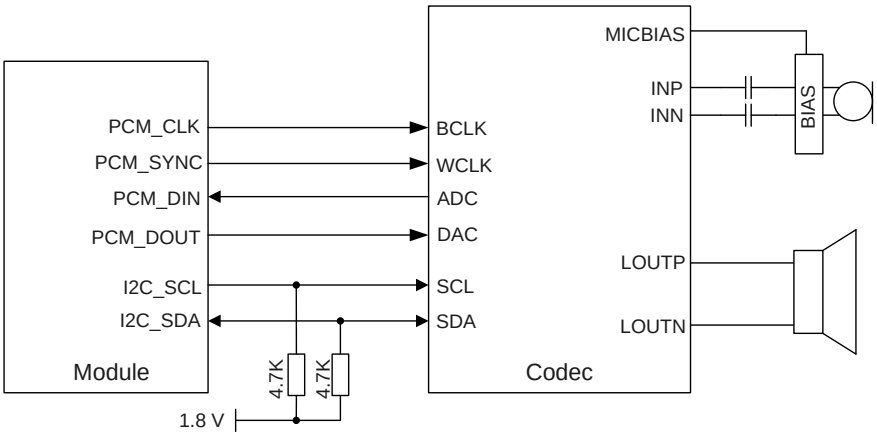

Figure 28: Reference Design of PCM and I2C Application with Audio Codec

3.13. Network Status Indication

The module provides one network status indication pin (NET_STATUS). The pin is used to drive a network status indication LED. The following tables describe the pin definition and logic level changes of NET_STATUS in different network activity status.

Table 19: Pin Definition of NET_STATUS

Pin Name	Pin No.	I/O	Description	Comment
NET_STATUS	21	DO	Indicates the module's network activity status	1.8 V power domain. If unused, keep this pin open.

Table 20: Operating State of NET_STATUS

Pin Name	Logic Level Changes	Network Status
NET_STATUS	Flicker slowly (200 ms High/1800 ms Low)	Network searching
	Flicker slowly (1800 ms High/200 ms Low)	Idle
	Flicker quickly (125 ms High/125 ms Low)	Data transfer is ongoing
	Always high	Voice calling

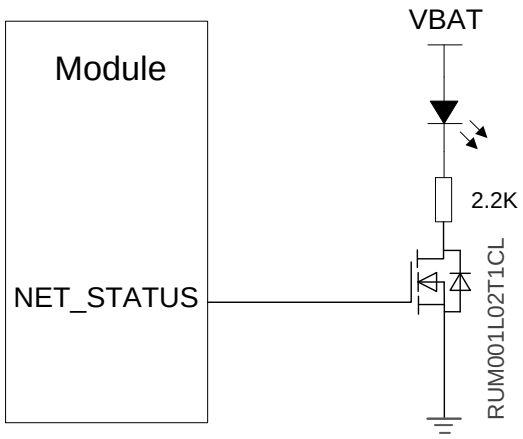

Figure 29: Reference Design of the Network Status Indicator

3.14. STATUS

The STATUS pin indicates the operation status of the module. It outputs high level when the module powers up.

Table 21: Pin Definition of STATUS

Pin Name	Pin No.	I/O	Description	Comment
STATUS	20	DO	Indicates the module's operation status	1.8 V power domain. If unused, keep this pin open.

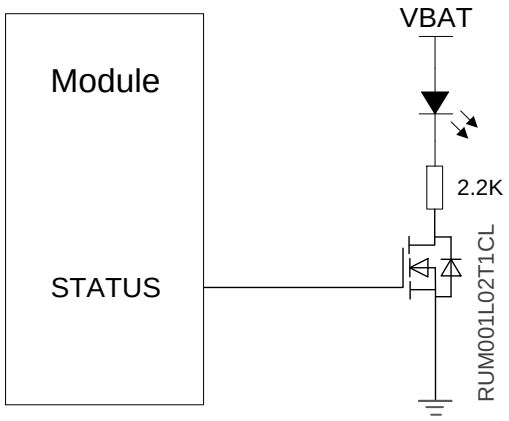

Figure 30: Reference Design of STATUS

3.15. MAIN_RI

AT+QCFG="risignaltype","physical" can configure MAIN_RI behavior. No matter on which port the URC is presented, the URC will trigger the behavior of MAIN_RI.

Table 22: Default Behaviours of MAIN_RI

State	Response
Idle	MAIN_RI keeps in high level.
URC	MAIN_RI outputs 120 ms low pulse when a new URC returns.

The default MAIN_RI pin behaviors can be configured flexibly by **AT+QCFG="urc/ri/ring"**. For more details about **AT+QCFG**, see ***document [4]***.

NOTE

A URC can be output from the UART through configuration via **AT+QURCCFG**. For details about the AT command, see ***document [3]***.

3.16. USB_BOOT

BG95 series provides a USB_BOOT pin. During development or factory production, USB_BOOT can force the module to boot from USB interface for firmware upgrade.

Table 23: Pin Definition of USB_BOOT Interface

Pin Name	Pin No.	I/O	Description	Comment
USB_BOOT	75	DI	Force the module into emergency download mode.	1.8 V power domain. Active high. If unused, keep it open.

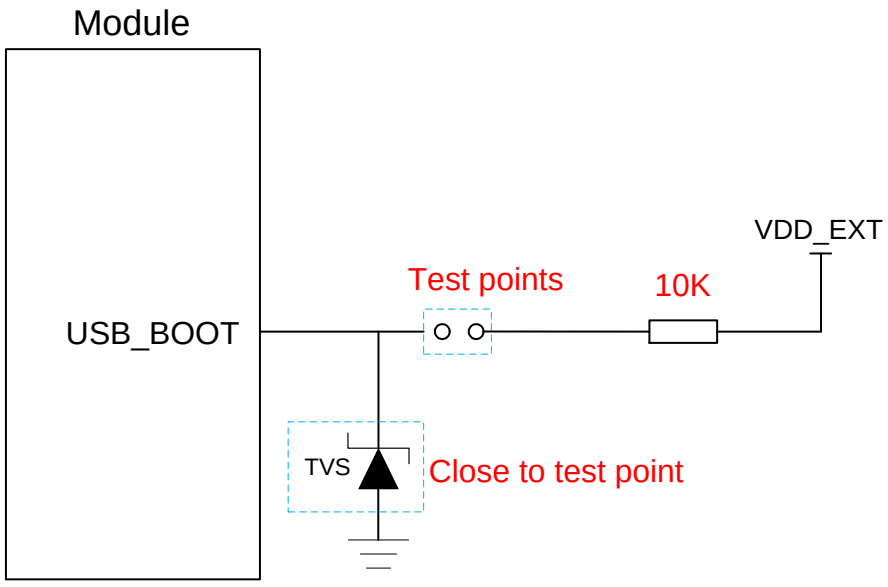

Figure 31: Reference Design of USB_BOOT Interface

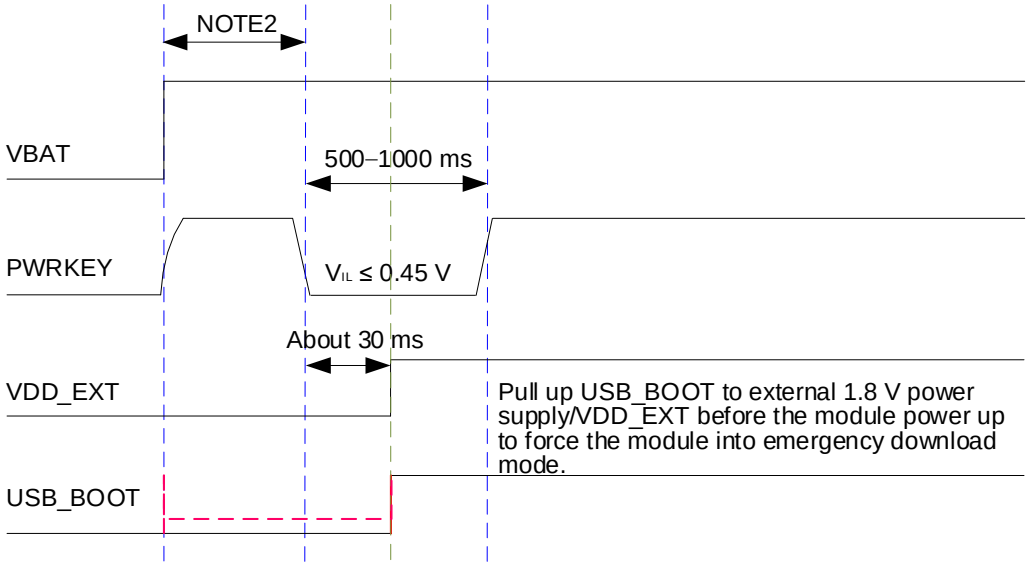

Figure 32: Timing for Turning on the Module with USB_BOOT

NOTE

1. It is recommended to reserve the above circuit design during application design.
2. Ensure that VBAT is stable before pulling down PWRKEY. It is recommended that the time difference between powering up VBAT and pulling down PWRKEY is not less than 30 ms.
3. When using MCU to control the module entering emergency download mode, follow the above timing. Connecting the test points as shown in ***Figure 31*** can manually force the module to enter download mode.

3.17. ADC Interfaces

The module provides two analog-to-digital converter (ADC) interfaces but only one ADC interface can be used at a time since ADC1 connects directly to ADC0 inside the module.

AT+QADC=0 can be used to read the voltage value on the ADC being used. For more details about the AT command, see ***document [3]***.

To improve the accuracy of ADC voltage values, the traces of ADC should be surrounded with ground.

Table 24: Pin Definition of ADC Interfaces

Pin Name	Pin No.	I/O	Description	Comment
ADC0	24	AI	General-purpose ADC interface	Do not use ADC0 and ADC1 simultaneously.
ADC1	2	AI		

Table 25: Characteristics of ADC Interfaces

Parameter	Min.	Typ.	Max.	Unit
Voltage Range	0.1	-	1.8	V
Resolution (LSB)	-	64.879	-	μV
Analog Bandwidth	-	500	-	kHz
Sample Clock	-	4.8	-	MHz
Input Resistance	10	-	-	MΩ

NOTE

1. It is prohibited to supply any voltage to ADC pin when VBAT is removed.
2. It is recommended to use resistor divider circuit for ADC application, and the divider resistor accuracy should be not less than 1 %.
3. Do not use ADC0 and ADC1 simultaneously, as ADC1 connects directly to ADC0 inside the module.

3.18. GPIO Interfaces

The module provides nine general-purpose input and output (GPIO) interfaces. **AT+QCFG="gpio"** can configure the status of GPIO pins. For more details about the AT command, see ***document [4]***.

Table 26: Pin Definition of GPIO Interfaces

Pin Name	Pin No.	I/O	Description	Comment
GPIO1 [20]	25	DIO	General-purpose input/output	1.8 V power domain. If unused, keep these pins open.
GPIO2	26			
GPIO3 [21]	64			
GPIO4 [19]	65			
GPIO5	66			
GPIO6	85			
GPIO7	86			
GPIO8	87			
GPIO9	88			

3.19. GRFC Interfaces

The module provides two generic RF control interfaces for the control of external antenna tuners.

Table 27: Pin Definition of GRFC Interfaces

Pin Name	Pin No.	I/O	Description	Comments
GRFC1	83	DO	Generic RF controller	1.8 V power domain. If unused, keep this pin open.
GRFC2	84			BOOT_CONFIG. Do not pull it up before startup. 1.8 V power domain.

[20] Pin 25 is a general-purpose IO by default. It can be multiplexed into fast shutdown interface with **AT+QCFG="fast/poweroff"**.
[21] BG95-MF does not support GPIO3 and GPIO4.

Table 28: Truth Table of GRFC Interfaces

GRFC1 Level	GRFC2 Level	Frequency Range (MHz)	Band
Low	Low	880–2180	B1, B2, B3, B4, B8, B25, B66
Low	High	791–894	B5, B18, B19, B20, B26, B27
High	Low	698–803	B12, B13, B28, B85
High	High	617–698	B71

NOTE

1. GRFC2 (pin 84) is a BOOT_CONFIG pin. Never pull it up before startup, otherwise the module cannot power on normally.
2. BG95-M4, BG95-M8 and BG95-M9 do not support GRFC interfaces.

4 GNSS

4.1. General Description

The module includes a fully integrated global navigation satellite system solution that supports GPS, GLONASS, BDS, Galileo and QZSS.

The module supports standard NMEA 0183 protocol, and outputs NMEA sentences at 1 Hz data update rate via USB interface by default.

By default, BG95 GNSS engine is switched off. It has to be switched on via AT command. The module does not support concurrent operation of WWAN and GNSS. For more details about GNSS engine technology and configurations, see ***document [1]***.

4.2. GNSS Performance

Table 29: GNSS Performance

Parameter	Description	Conditions	Typ.	Unit
Sensitivity	Acquisition	Autonomous	-146	dBm
	Reacquisition	Autonomous	-157	dBm
	Tracking	Autonomous	-157	dBm
TTFF	Cold start @ open sky	Autonomous	31.01	s
		XTRA enabled	10.4	s
	Warm start @ open sky	Autonomous	30.58	s
		XTRA enabled	1.53	s
	Hot start @ open sky	Autonomous	1.6	s

		XTRA enabled	1.5	s
Accuracy	CEP-50	Autonomous @ open sky	2.5	m

NOTE

1. Tracking sensitivity: the minimum GNSS signal power at which the module can maintain lock (keep positioning for at least 3 minutes continuously).
2. Reacquisition sensitivity: the minimum GNSS signal power required for the module to maintain lock within 3 minutes after loss of lock.
3. Acquisition sensitivity: the minimum GNSS signal power at which the module can fix position successfully within 3 minutes after executing cold start command.

4.3. Layout Guidelines

The following layout guidelines should be taken into account in application designs.

- Maximize the distance between GNSS antenna and main antenna.
- Digital circuits such as (U)SIM card, USB interface, camera module, display connector and SD card should be away from the antennas.
- Use ground vias around the GNSS trace and sensitive analog signal traces to provide coplanar isolation and protection.
- Keep 50 Ω characteristic impedance for ANT_GNSS trace.

See ***Chapter 5*** for GNSS antenna reference design and antenna installation information.

5 Antenna Interfaces

The module includes a main antenna interface and a GNSS antenna interface. Additionally, BG95-MF supports Wi-Fi antenna interface. The impedance of antenna ports is 50 Ω.

5.1. Main Antenna Interface

5.1.1. Pin Definition

Table 30: Pin Definition of Main Antenna Interface

Pin Name	Pin No.	I/O	Description	Comment
ANT_MAIN	60	AIO	Main antenna interface	50 Ω impedance

5.1.2. Operating Frequency

Table 31: Operating Frequency of BG95 Series Module

3GPP Band	Transmit	Receive	Unit
GSM850	824–849	869–894	MHz
EGSM900	880–915	925–960	MHz
DCS1800	1710–1785	1805–1880	MHz
PCS1900	1850–1910	1930–1990	MHz
LTE HD-FDD B1	1920–1980	2110–2170	MHz
LTE HD-FDD B2	1850–1910	1930–1990	MHz
LTE HD-FDD B3	1710–1785	1805–1880	MHz

LTE HD-FDD B4	1710–1755	2110–2155	MHz
LTE HD-FDD B5	824–849	869–894	MHz
LTE HD-FDD B8	880–915	925–960	MHz
LTE HD-FDD B12	699–716	729–746	MHz
LTE HD-FDD B13	777–787	746–756	MHz
LTE HD-FDD B18	815–830	860–875	MHz
LTE HD-FDD B19	830–845	875–890	MHz
LTE HD-FDD B20	832–862	791–821	MHz
LTE HD-FDD B25	1850–1915	1930–1995	MHz
LTE HD-FDD B26	814–849	859–894	MHz
LTE HD-FDD B27	807–824	852–869	MHz
LTE HD-FDD B28	703–748	758–803	MHz
LTE HD-FDD B31	452.5–457.5	462.5–467.5	MHz
LTE HD-FDD B66	1710–1780	2110–2180	MHz
LTE HD-FDD B71	663–698	617–652	MHz
LTE HD-FDD B72	451–456	461–466	MHz
LTE HD-FDD B73	450–455	460–465	MHz
LTE HD-FDD B85	698–716	728–746	MHz
LTE HD-FDD B86	787–788	757–758	MHz
LTE HD-FDD B87	410–415	420–425	MHz
LTE HD-FDD B88	412–417	422–427	MHz

NOTE

1. LTE HD-FDD B26 and B27 are supported by Cat M1 only.
2. LTE HD-FDD B31, B72 and B73 are supported by BG95-M4, BG95-M8 and BG95-M9.
3. LTE HD-FDD B71 is supported by Cat NB2 only.

5.1.3. Reference Design

A reference design of main antenna interface is shown as below. It is recommended to reserve a π-type matching circuit for better RF performance, and the π-type matching components (R1/C1/C2) should be placed as close to the antenna as possible. The capacitors are not mounted by default.

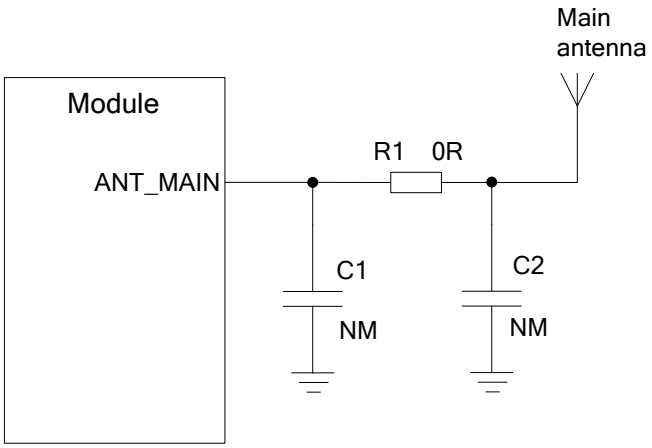

Figure 33: Reference Design of Main Antenna Interface

5.2. GNSS Antenna Interface

5.2.1. Pin Definition

Table 32: Pin Definition of GNSS Antenna Interface

Pin Name	Pin No.	I/O	Description	Comment
ANT_GNSS	49	AI	GNSS antenna interface	50 Ω impedance. If unused, keep this pin open.

5.2.2. GNSS Operating Frequency

Table 33: GNSS Operating Frequency

Type	Frequency	Unit
GPS	1575.42 ±1.023	MHz
GLONASS	1597.5–1605.8	MHz
Galileo	1575.42 ±2.046	MHz
BDS	1561.098 ±2.046	MHz
QZSS	1575.42 ±1.023	MHz

5.2.3. Reference Design

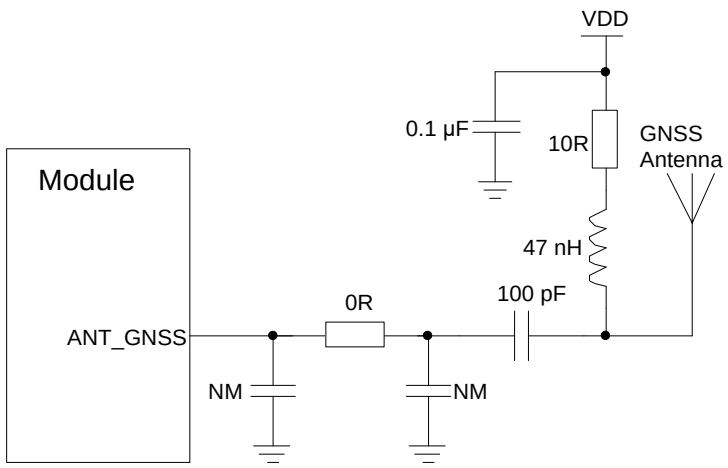

Figure 34: Reference Design of GNSS Antenna Interface

NOTE

1. An external LDO can be selected to supply power according to the active antenna requirement.
2. If the module is designed with a passive antenna, then the VDD circuit is not needed.

5.3. Wi-Fi Antenna Interface

BG95-MF supports Wi-Fi antenna interface through which the module performs Wi-Fi d (receiving only).

5.3.1. Pin Definition

Table 34: Pin Definition of Wi-Fi Antenna Interface

Pin Name	Pin No.	I/O	Description	Comment
ANT_WIFI	56	AI	Wi-Fi antenna interface	50 Ω impedance.

5.3.2. Wi-Fi Operating Frequency

Table 35: Wi-Fi Operating Frequency

Standard	Frequency	Unit
802.11b/g/n	2400–2483.5	MHz

5.3.3. Reference Design

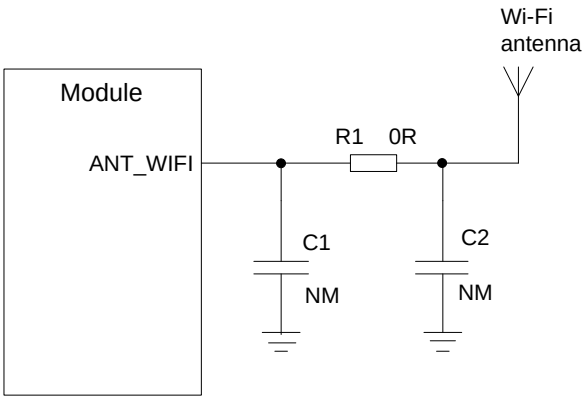

Figure 35: Reference Design of Wi-Fi Antenna Interface

5.4. RF Routing Guidelines

For your PCB, the characteristic impedance of all RF traces should be controlled to 50 Ω. The impedance of the RF traces is usually determined by the trace width (W), the materials' dielectric constant, the height from the reference ground to the signal layer (H), and the spacing between RF traces and grounds (S). Microstrip or coplanar waveguide is typically used in RF layout to control characteristic impedance. The following are reference designs of microstrip or coplanar waveguide with different PCB structures.

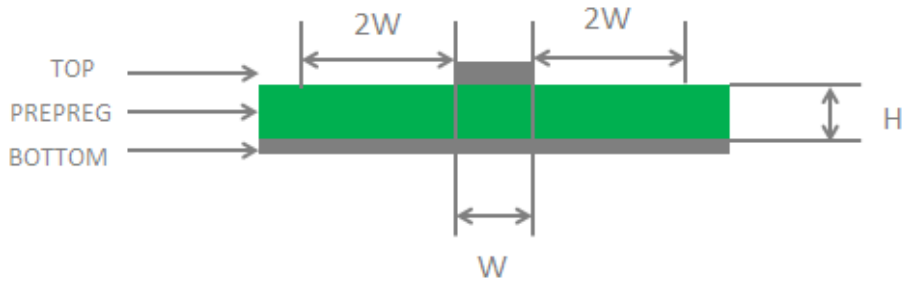

Figure 36: Microstrip Design on a 2-layer PCB

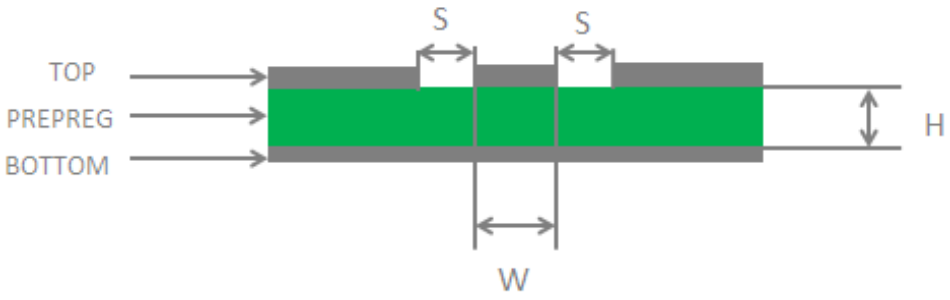

Figure 37: Coplanar Waveguide Design on a 2-layer PCB

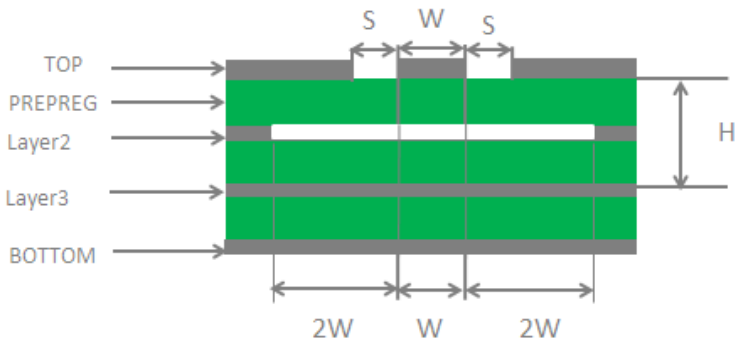

Figure 38: Coplanar Waveguide Design on a 4-layer PCB (Layer 3 as Reference Ground)

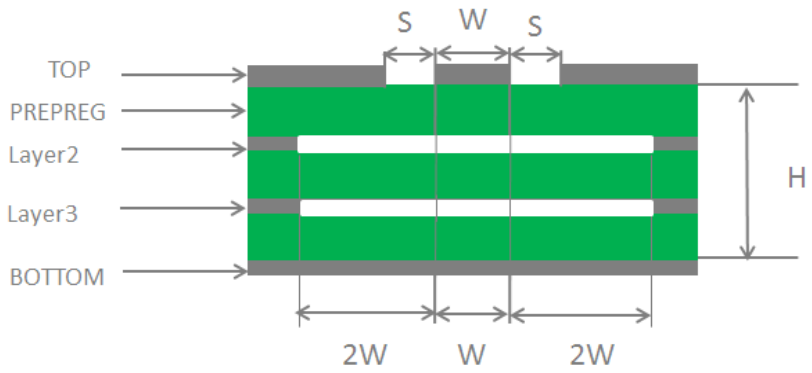

Figure 39: Coplanar Waveguide Design on a 4-layer PCB (Layer 4 as Reference Ground)

To ensure RF performance and reliability, the following principles should be complied with in RF layout design:

- Use an impedance simulation tool to accurately control the characteristic impedance of RF traces to 50 Ω.
- The GND pins adjacent to RF pins should not be designed as thermal relief pads, and should be fully connected to ground.
- The distance between the RF pins and the RF connector should be as short as possible, and all the right-angle traces should be changed to curved ones. The recommended trace angle is 135°.
- There should be clearance under the signal pin of the antenna connector or solder joint.
- The reference ground of RF traces should be complete. Meanwhile, adding some ground vias around RF traces and the reference ground could help to improve RF performance. The distance between the ground vias and RF traces should be not less than twice the width of RF signal traces (2 × W).
- Keep RF traces away from interference sources, and avoid intersection and paralleling between traces on adjacent layers.

For more details about RF layout, see ***document [5]***.

5.5. Antenna Installation

5.5.1. Requirements for Antenna Design

Table 36: Requirements for Antenna Design

Antenna Type	Requirements
GNSS [22]	Frequency range: 1559–1609 MHz Polarization: RHCP or linear VSWR: ≤ 2 (Typ.) Passive antenna gain: > 0 dBi Active antenna noise figure: < 1.5 dB Active antenna gain: > 0 dBi Active antenna embedded LNA gain: < 17 dB
LTE/GSM	VSWR: ≤ 2 Efficiency: > 30 % Max. Input Power: 50 W Input Impedance: 50 Ω Cable Insertion Loss: ● **< 1 dB:** LB (<1 GHz) ● **< 1.5 dB:** MB (1–2.3 GHz)
Wi-Fi (For BG95-MF only)	VSWR: ≤ 2 Gain: 1 dBi Max Input Power: 50 W Input Impedance: 50 Ω Polarization Type: Vertical Cable Insertion Loss: < 1 dB

[22] It is recommended to use a passive GNSS antenna when LTE HD-FDD B13 is supported, as the use of active antenna may generate harmonics which will affect the GNSS performance.

5.5.2. RF Connector Recommendation

If RF connector is used for antenna connection, it is recommended to use the U.FL-R-SMT connectors provided by Hirose.

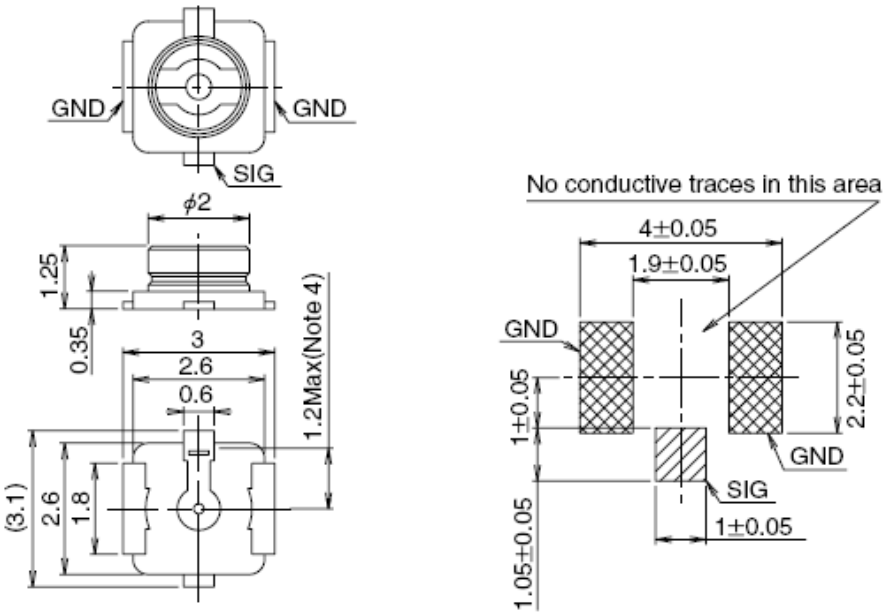

Figure 40: Dimensions of the Receptacle (Unit: mm)

U.FL-LP series mated plugs listed in the following figure can be used to match the U.FL-R-SMT.

Part No.	U.FL-LP-040	U.FL-LP-066	U.FL-LP(V)-040	U.FL-LP-062	U.FL-LP-088
	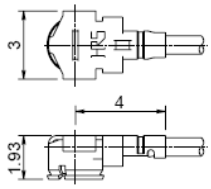	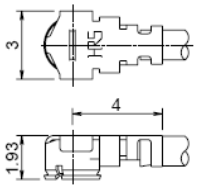	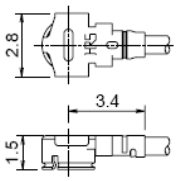	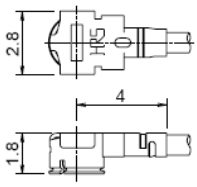	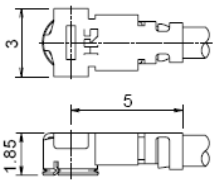
Mated Height	2.5mm Max. (2.4mm Nom.)	2.5mm Max. (2.4mm Nom.)	2.0mm Max. (1.9mm Nom.)	2.4mm Max. (2.3mm Nom.)	2.4mm Max. (2.3mm Nom.)
Applicable cable	Dia. 0.81mm Coaxial cable	Dia. 1.13mm and Dia. 1.32mm Coaxial cable	Dia. 0.81mm Coaxial cable	Dia. 1mm Coaxial cable	Dia. 1.37mm Coaxial cable
Weight (mg)	53.7	59.1	34.8	45.5	71.7
RoHS	YES				

Figure 41: Specifications of Mated Plugs

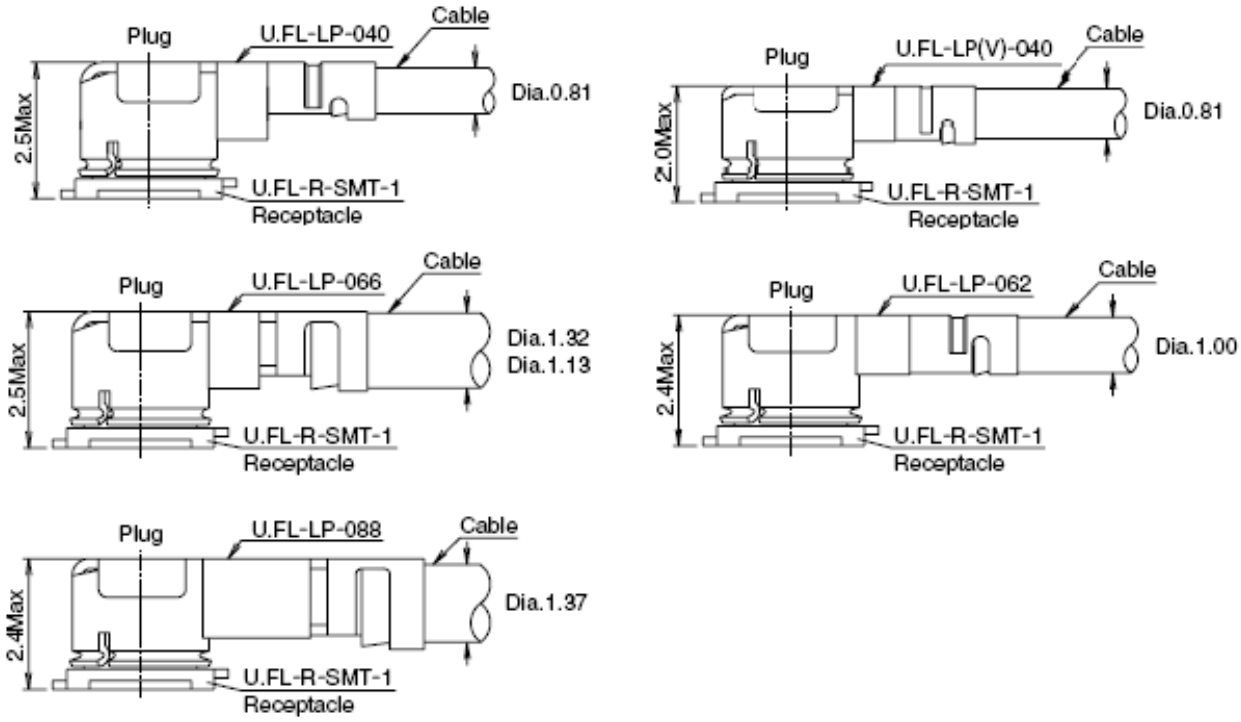

Figure 42: Space Factor of Mated Connectors (Unit: mm)

For more details, visit http://www.hirose.com.

6 Electrical Characteristics and Reliability

6.1. Absolute Maximum Ratings

Absolute maximum ratings for power supply and voltage on digital and analog pins of the module are listed in the following table.

Table 37: Absolute Maximum Ratings

Parameter	Min.	Max.	Unit
VBAT_BB	-0.5	6.0	V
VBAT_RF	-0.3	6.0	V
USB_VBUS	-0.3	5.5	V
Voltage at Digital Pins	-0.3	2.09	V

6.2. Power Supply Ratings

Table 38: Power Supply Ratings

Parameter	Description	Conditions	Module	Min.	Typ.	Max.	Unit
VBAT	VBAT_BB/ VBAT_RF	The actual input voltages must be	BG95-M1/ BG95-M2	2.6 [23]	3.3	4.8	V

[23] For every VBAT transition/re-insertion from 0 V, the minimum power supply voltage should be higher than 2.7 V. After the module starts up normally, the minimum safety voltage is 2.6 V. To ensure full functionality mode, the minimum power supply voltage should be higher than 2.8 V.

		kept between the minimum and the maximum values.	BG95-M3/ BG95-M5/ BG95-M6/ BG95-MF/ BG95-M8	3.3	3.8	4.3	V
			BG95-M4/ BG95-M9	3.2	3.8	4.2	V
I_{VBAT}	Peak power consumption (during transmission slot)	At maximum power control level	BG95-M3/ BG95-M5/ BG95-M8	-	1.8	2.7	A
	Peak power consumption	In LTE Cat M1 and/or Cat NB2 transmission modes	BG95-M1/ BG95-M2/ BG95-M4/ BG95-M6/ BG95-MF/ BG95-M9	-	0.8	1.0	A
USB_VBUS	USB connection detection		BG95 series	4.0	5.0	5.25	V

6.3. Operating and Storage Temperatures

Table 39: Operating and Storage Temperatures

Parameter	Min.	Typ.	Max.	Unit
Operating Temperature Range [24]	-35	+25	+75	ºC
Extended Temperature Range [25]	-40	-	+85	ºC
Storage Temperature Range	-40	-	+90	ºC

[24] Within the operating temperature range, the module meets 3GPP specifications.

[25] Within the extended temperature range, the module remains the ability to establish and maintain functions such as voice*, SMS and data transmission, without any unrecoverable malfunction. Radio spectrum and radio network are not influenced, while one or more specifications, such as P_{out}, may exceed the specified tolerances of 3GPP. When the temperature returns to the operating temperature range, the module meets 3GPP specifications again.

6.4. Power Consumption

6.4.1. BG95-M1 Power Consumption

Table 40: BG95-M1 Power Consumption (3.3 V Power Supply, Room Temperature)

Description	Conditions	Average	Unit
Leakage	Power-off @ USB and UART disconnected	14	μA
PSM [26]	Power Saving Mode	4	μA
Rock Bottom	**AT+CFUN=0** @ Sleep mode	0.53	mA
Sleep Mode (USB disconnected)	LTE Cat M1 DRX = 1.28 s	1.7	mA
	LTE Cat M1 e-I-DRX = 81.92 s @ PTW = 2.56 s, DRX = 1.28 s	0.577	mA
Idle Mode (USB disconnected)	LTE Cat M1 DRX = 1.28 s	20	mA
	LTE Cat M1 e-I-DRX = 81.92 s @ PTW = 2.56 s, DRX = 1.28 s	19.57	mA
LTE Cat M1 data transfer (GNSS OFF)	B1 @ 20.66 dBm	200.47	mA
	B2 @ 20.81 dBm	202.12	mA
	B3 @ 21.24 dBm	199.57	mA
	B4 @ 20.82 dBm	197.79	mA
	B5 @ 21.12 dBm	219.9	mA
	B8 @ 21.03 dBm	209.96	mA
	B12 @ 20.67 dBm	202.55	mA
	B13 @ 20.92 dBm	225.42	mA

[26] The module's power consumption in PSM is much lower than that in power-off mode due to the following two designs:

- More internal power supplies are powers off in PSM.
- The internal clock frequency is reduced in PSM.

The module's USB and UART are disconnected and GSM network (if available) does not support PSM.

	B18 @ 21.02 dBm	214.87	mA
	B19 @ 20.95 dBm	216.17	mA
	B20 @ 20.96 dBm	214.52	mA
	B25 @ 21.02 dBm	203.86	mA
	B26 @ 21.06 dBm	218.97	mA
	B27 @ 20.8 dBm	212.89	mA
	B28A @ 20.89 dBm	210.15	mA
	B28B @ 21 dBm	217.13	mA
	B66 @ 21.03 dBm	198.63	mA
	B85 @ 21 dBm	203.36	mA

6.4.2. BG95-M2 Power Consumption

Table 41: BG95-M2 Power Consumption (3.3 V Power Supply, Room Temperature)

Description	Conditions	Average	Unit
Leakage	Power-off @ USB and UART disconnected	12.46	μA
PSM [26]	Power Saving Mode	3.89	μA
Rock Bottom	**AT+CFUN=0** @ Sleep mode	0.554	mA
Sleep Mode (USB disconnected)	LTE Cat M1 DRX = 1.28 s	1.68	mA
	LTE Cat NB1 DRX = 1.28 s	1.55	mA
	LTE Cat M1 e-I-DRX = 81.92 s @ PTW = 2.56 s, DRX = 1.28 s	0.549	mA
	LTE Cat NB1 e-I-DRX = 81.92 s @ PTW = 2.56 s, DRX = 1.28 s	0.592	mA
Idle Mode (USB disconnected)	LTE Cat M1 DRX = 1.28 s	21.2	mA
	LTE Cat NB1 DRX = 1.28 s	16.8	mA

	LTE Cat M1 e-I-DRX = 81.92 s @ PTW = 2.56 s, DRX = 1.28 s	20.6	mA
	LTE Cat NB1 e-I-DRX = 81.92 s @ PTW = 2.56 s, DRX = 1.28 s	16.4	mA
LTE Cat M1 data transfer (GNSS OFF)	B1 @ 20.96 dBm	200.76	mA
	B2 @ 21.16 dBm	204.65	mA
	B3 @ 21.19 dBm	198.23	mA
	B4 @ 21.36 dBm	199.07	mA
	B5 @ 20.97 dBm	218.17	mA
	B8 @ 20.72 dBm	208.15	mA
	B12 @ 21.08 dBm	211.45	mA
	B13 @ 21.01 dBm	223.86	mA
	B18 @ 21.03 dBm	220.07	mA
	B19 @ 21.03 dBm	217.55	mA
	B20 @ 21.03 dBm	220.29	mA
	B25 @ 20.87 dBm	204.23	mA
	B26 @ 21.02 dBm	217.94	mA
	B27 @ 21.2 dBm	222.32	mA
	B28A @ 20.71 dBm	210.33	mA
	B28B @ 20.6 dBm	216.98	mA
	B66 @ 20.98 dBm	197.33	mA
	B85 @ 21.05 dBm	211.41	mA
LTE Cat NB1 data transfer (GNSS OFF)	B1 @ 21.06 dBm	158.87	mA
	B2 @ 21.08 dBm	160.58	mA
	B3 @ 20.97 dBm	151.47	mA
	B4 @ 21.05 dBm	151.14	mA

	B5 @ 20.9 dBm	173.72	mA
	B8 @ 20.87 dBm	166.6	mA
	B12 @ 21.05 dBm	161.94	mA
	B13 @ 20.88 dBm	180.98	mA
	B18 @ 20.97 dBm	175.49	mA
	B19 @ 20.99 dBm	174.59	mA
	B20 @ 20.99 dBm	173.42	mA
	B25 @ 20.96 dBm	157.75	mA
	B28 @ 21 dBm	162.61	mA
	B66 @ 21.19 dBm	152.1	mA
	B71 @ 21.15 dBm	153.81	mA
	B85 @ 21.32 dBm	166.88	mA

6.4.3. BG95-M3 Power Consumption

Table 42: BG95-M3 Power Consumption (3.8 V Power Supply, Room Temperature)

Description	Conditions	Average	Unit
Leakage	Power-off @ USB and UART disconnected	12.99	μA
PSM [26]	Power Saving Mode	3.89	μA
Rock Bottom	**AT+CFUN=0** @ Sleep mode	0.575	mA
Sleep Mode (USB disconnected)	LTE Cat M1 DRX = 1.28 s	1.89	mA
	LTE Cat NB1 DRX = 1.28 s	1.49	mA
	EGSM900 DRX = 5	1.21	mA
	DCS1800 DRX = 5	1.20	mA

	LTE Cat M1 e-I-DRX = 81.92 s @ PTW = 2.56 s, DRX = 1.28 s	0.63	mA
	LTE Cat NB1 e-I-DRX = 81.92 s @ PTW = 2.56 s, DRX = 1.28 s	0.67	mA
Idle Mode (USB disconnected)	LTE Cat M1 DRX = 1.28 s	18.9	mA
	LTE Cat NB1 DRX = 1.28 s	14.8	mA
	LTE Cat M1 e-I-DRX = 81.92 s @ PTW = 2.56 s, DRX = 1.28 s	18.2	mA
	LTE Cat NB1 e-I-DRX = 81.92 s @ PTW = 2.56 s, DRX = 1.28 s	14.3	mA
LTE Cat M1 data transfer (GNSS OFF)	B1 @ 21.29 dBm	193.65	mA
	B2 @ 20.73 dBm	190.76	mA
	B3 @ 20.67 dBm	185.89	mA
	B4 @ 20.85 dBm	185.14	mA
	B5 @ 21.02 dBm	194.99	mA
	B8 @ 21.02 dBm	197.31	mA
	B12 @ 20.96 dBm	189.54	mA
	B13 @ 20.99 dBm	198.75	mA
	B18 @ 21 dBm	195.07	mA
	B19 @ 20.95 dBm	197.63	mA
	B20 @ 20.92 dBm	197.33	mA
	B25 @ 21.08 dBm	190.67	mA
	B26 @ 20.98 dBm	195.96	mA
	B27 @ 20.69 dBm	192.07	mA
	B28A @ 20.87 dBm	192.04	mA
	B28B @ 21.03 dBm	197.39	mA

	B66 @ 21.11 dBm	188.1	mA
	B85 @ 20.87 dBm	185.3	mA
LTE Cat NB1 data transfer (GNSS OFF)	B1 @ 20.86 dBm	153.2	mA
	B2 @ 21.28 dBm	155.14	mA
	B3 @ 21.07 dBm	149.14	mA
	B4 @ 20.91 dBm	147.72	mA
	B5 @ 20.55 dBm	154.68	mA
	B8 @ 21.01 dBm	158.82	mA
	B12 @ 20.88 dBm	148.37	mA
	B13 @ 21.09 dBm	167.03	mA
	B18 @ 20.79 dBm	157.12	mA
	B19 @ 20.68 dBm	156.29	mA
	B20 @ 21.01 dBm	161.75	mA
	B25 @ 21.02 dBm	154.16	mA
	B28 @ 20.82 dBm	147.82	mA
	B66 @ 21 dBm	148.58	mA
	B71 @ 20.81 dBm	137.53	mA
	B85 @ 20.64 dBm	146.51	mA
GPRS data transfer (GNSS OFF)	GSM850 4UL/1DL @ 30.5 dBm	670.73	mA
	EGSM900 4UL/1DL @ 29.65 dBm	623.34	mA
	DCS1800 4UL/1DL @ 26.24 dBm	408.25	mA
	PCS1900 4UL/1DL @ 26.43 dBm	423.12	mA
	EGSM900 1UL/4DL @ 31.96 dBm	255.82	mA
	DCS1800 1UL/4DL @ 29.35 dBm	179.29	mA
EDGE data transfer	GSM850 4UL/1DL @ 22.97 dBm	519	mA

(GNSS OFF)	EGSM900 4UL/1DL @ 22.51 dBm	517.59	mA
	DCS1800 4UL/1DL @ 22.73 dBm	439.73	mA
	PCS1900 4UL/1DL @ 22.27 dBm	443.94	mA

6.4.4. BG95-M4 Power Consumption

Table 43: BG95-M4 Power Consumption (3.8 V Power Supply, Room Temperature)

Description	Conditions	Average	Unit
Leakage	Power-off @ USB and UART disconnected	13.76	μA
PSM [26]	Power Saving Mode	3.94	μA
Rock Bottom	**AT+CFUN=0** @ Sleep mode	0.556	mA
Sleep Mode (USB disconnected)	LTE Cat M1 DRX = 1.28 s	1.53	mA
	LTE Cat NB1 DRX = 1.28 s	1.39	mA
	LTE Cat M1 e-I-DRX = 81.92 s @ PTW = 2.56 s, DRX = 1.28 s	0.554	mA
	LTE Cat NB1 e-I-DRX = 81.92 s @ PTW = 2.56 s, DRX = 1.28 s	0.588	mA
Idle Mode (USB disconnected)	LTE Cat M1 DRX = 1.28 s	18.176	mA
	LTE Cat NB1 DRX = 1.28 s	14.425	mA
	LTE Cat M1 e-I-DRX = 81.92 s @ PTW = 2.56 s, DRX = 1.28 s	17.604	mA
	LTE Cat NB1 e-I-DRX = 81.92 s @ PTW = 2.56 s, DRX = 1.28 s	14.061	mA
LTE Cat M1 data transfer (GNSS OFF)	B1 @ 20.41 dBm	179.3	mA
	B2 @ 20.6 dBm	184.18	mA
	B3 @ 20.67 dBm	180.85	mA

	B4 @ 20.54 dBm	177.54	mA
	B5 @ 20.98 dBm	187.2	mA
	B8 @ 20.28 dBm	185.97	mA
	B12 @ 20.6 dBm	184.93	mA
	B13 @ 20.69 dBm	186.61	mA
	B18 @ 20.29 dBm	179.33	mA
	B19 @ 20.72 dBm	184.35	mA
	B20 @ 20.75 dBm	185.44	mA
	B25 @ 20.73 dBm	185.15	mA
	B26 @ 20.94 dBm	183.29	mA
	B27 @ 20.65 dBm	182.74	mA
	B28A @ 20.36 dBm	184.25	mA
	B28B @ 20.66 dBm	187.13	mA
	B31 @ 22.27 dBm	187.01	mA
	B31 @ 26.11 dBm	225.43	mA
	B66 @ 20.98 dBm	182.56	mA
	B72 @ 22.72 dBm	191.15	mA
	B72 @ 26.01 dBm	225.08	mA
	B73 @ 22.3 dBm	189.37	mA
	B73 @ 26.11 dBm	227.73	mA
	B85 @ 20.71 dBm	184.37	mA
LTE Cat NB1 data transfer (GNSS OFF)	B1 @ 21.14 dBm	145.63	mA
	B2 @ 21.02 dBm	145.24	mA
	B3 @ 21.01 dBm	141.9	mA
	B4 @ 21.2 dBm	143.23	mA

	B5 @ 20.79 dBm	143	mA
	B8 @ 20.86 dBm	156.34	mA
	B12 @ 21.02 dBm	149.72	mA
	B13 @ 21.03 dBm	150.06	mA
	B18 @ 20.79 dBm	142.77	mA
	B19 @ 21.12 dBm	146.11	mA
	B20 @ 20.89 dBm	145.87	mA
	B25 @ 21.09 dBm	147.17	mA
	B28 @ 20.84 dBm	147.14	mA
	B31 @ 22.07 dBm	146.57	mA
	B31 @ 25.94 dBm	194.53	mA
	B66 @ 20.94 dBm	140.97	mA
	B72 @ 22.12 dBm	147.19	mA
	B72 @ 26.07 dBm	195.16	mA
	B73 @ 22.31 dBm	147.55	mA
	B73 @ 25.89 dBm	192.77	mA
	B85 @ 20.94 dBm	147.15	mA

6.4.5. BG95-M5 Power Consumption

Table 44: BG95-M5 Power Consumption (3.8 V Power Supply, Room Temperature)

Description	Conditions	Average	Unit
Leakage	Power-off @ USB and UART disconnected	14.87	μA
PSM [26]	Power Saving Mode	5.10	μA
Rock Bottom	**AT+CFUN=0** @ Sleep mode	0.587	mA

Sleep Mode (USB disconnected)	LTE Cat M1 DRX = 1.28 s	1.56	mA
	LTE Cat NB1 DRX = 1.28 s	1.43	mA
	EGSM900 DRX = 5	1.21	mA
	DCS1800 DRX = 5	1.17	mA
	LTE Cat M1 e-I-DRX = 81.92 s @ PTW = 2.56 s, DRX = 1.28 s	0.72	mA
	LTE Cat NB1 e-I-DRX = 81.92 s @ PTW = 2.56 s, DRX = 1.28 s	0.68	mA
Idle Mode (USB disconnected)	LTE Cat M1 DRX = 1.28 s	17.3	mA
	LTE Cat NB1 DRX = 1.28 s	13.5	mA
	LTE Cat M1 e-I-DRX = 81.92 s @ PTW = 2.56 s, DRX = 1.28 s	16.6	mA
	LTE Cat NB1 e-I-DRX = 81.92 s @ PTW = 2.56 s, DRX = 1.28 s	13.1	mA
LTE Cat M1 data transfer (GNSS OFF)	B1 @ 22.58 dBm	218.72	mA
	B2 @ 22.99 dBm	216.74	mA
	B3 @ 22.96 dBm	226.63	mA
	B4 @ 22.82 dBm	225.59	mA
	B5 @ 22.83 dBm	233.79	mA
	B8 @ 22.89 dBm	226.57	mA
	B12 @ 22.71 dBm	218.31	mA
	B13 @ 23 dBm	230.49	mA
	B18 @ 22.75 dBm	227.33	mA
	B19 @ 22.56 dBm	231.22	mA
	B20 @ 23.03 dBm	241.04	mA
	B25 @ 22.74 dBm	212.63	mA

	B26 @ 23.13 dBm	234.54	mA
	B27 @ 22.54 dBm	225.16	mA
	B28A @ 23.01 dBm	224.57	mA
	B28B @ 23.29 dBm	231.88	mA
	B66 @ 22.76 dBm	219.52	mA
	B85 @ 23.02 dBm	220.6	mA
LTE Cat NB1 data transfer (GNSS OFF)	B1 @ 22.59 dBm	183.76	mA
	B2 @ 23.15 dBm	188.56	mA
	B3 @ 23.04 dBm	194.29	mA
	B4 @ 22.75 dBm	198.68	mA
	B5 @ 22.87 dBm	197.07	mA
	B8 @ 22.79 dBm	189.49	mA
	B12 @ 22.83 dBm	179.76	mA
	B13 @ 23.07 dBm	196.98	mA
	B18 @ 22.6 dBm	192.52	mA
	B19 @ 22.62 dBm	192.24	mA
	B20 @ 23.15 dBm	200.01	mA
	B25 @ 22.95 dBm	185.15	mA
	B28 @ 22.93 dBm	178.48	mA
	B66 @ 23.07 dBm	198.04	mA
	B71 @ 23 dBm	178.59	mA
	B85 @ 23.03 dBm	177.56	mA
GPRS data transfer (GNSS OFF)	GSM850 4UL/1DL @ 29.43 dBm	598.33	mA
	EGSM900 4UL/1DL @ 28.76 dBm	564.27	mA
	DCS1800 4UL/1DL @ 25.83 dBm	440.14	mA

	PCS1900 4UL/1DL @ 25.81dBm	451.49	mA
EDGE data transfer (GNSS OFF)	GSM850 4UL/1DL @ 23.22 dBm	552.75	mA
	EGSM900 4UL/1DL @ 23.28 dBm	555.95	mA
	DCS1800 4UL/1DL @ 21.63 dBm	491.43	mA
	PCS1900 4UL/1DL @ 21.53 dBm	494.98	mA

6.4.6. BG95-M6 Power Consumption

Table 45: BG95-M6 Power Consumption (3.8 V Power Supply, Room Temperature)

Description	Conditions	Average	Unit
Leakage	Power-off @ USB and UART disconnected	13.57	μA
PSM [24]	Power Saving Mode	4.32	μA
Rock Bottom	**AT+CFUN=0** @ Sleep mode	0.473	mA
Sleep Mode (USB disconnected)	LTE Cat M1 DRX = 1.28 s	1.42	mA
	LTE Cat NB1 DRX = 1.28 s	1.31	mA
	LTE Cat M1 e-I-DRX = 81.92 s @ PTW = 2.56 s, DRX = 1.28 s	0.58	mA
	LTE Cat NB1 e-I-DRX = 81.92 s @ PTW = 2.56 s, DRX = 1.28 s	0.55	mA
Idle Mode (USB disconnected)	LTE Cat M1 DRX = 1.28 s	18.5	mA
	LTE Cat NB1 DRX = 1.28 s	14.2	mA
	LTE Cat M1 e-I-DRX = 81.92 s @ PTW = 2.56 s, DRX = 1.28 s	18.2	mA
	LTE Cat NB1 e-I-DRX = 81.92 s @ PTW = 2.56 s, DRX = 1.28 s	14	mA
LTE Cat M1 data transfer	B1 @ 22.91 dBm	199.7	mA

(GNSS OFF)	B2 @ 22.69 dBm	203.64	mA
	B3 @ 22.75 dBm	200.94	mA
	B4 @ 22.94 dBm	205.62	mA
	B5 @ 23.01 dBm	216.42	mA
	B8 @ 22.75 dBm	218.12	mA
	B12 @ 22.72 dBm	192.36	mA
	B13 @ 23.03 dBm	208.61	mA
	B18 @ 22.5 dBm	210.15	mA
	B19 @ 22.74 dBm	215.11	mA
	B20 @ 22.83 dBm	218.18	mA
	B25 @ 22.74 dBm	199.24	mA
	B26 @ 22.84 dBm	212.06	mA
	B27 @ 22.96 dBm	211.86	mA
	B28A @ 22.87 dBm	197.23	mA
	B28B @ 22.9 dBm	201.35	mA
	B66 @ 22.83 dBm	202.47	mA
	B85 @ 23.01 dBm	194.48	mA
LTE Cat NB1 data transfer (GNSS OFF)	B1 @ 22.84 dBm	177.8	mA
	B2 @ 22.76 dBm	172.31	mA
	B3 @ 22.68 dBm	167.18	mA
	B4 @ 22.98 dBm	176.91	mA
	B5 @ 22.91 dBm	179.95	mA
	B8 @ 23.09 dBm	193.03	mA
	B12 @ 23.07 dBm	162.89	mA
	B13 @ 22.96 dBm	172.4	mA

	B18 @ 22.73 dBm	175.49	mA
	B19 @ 22.95 dBm	181.95	mA
	B20 @ 22.98 dBm	187.71	mA
	B25 @ 22.87 dBm	172.34	mA
	B28 @ 22.96 dBm	163.55	mA
	B66 @ 23.13 dBm	178.54	mA
	B71 @ 23.1 dBm	160.7	mA
	B85 @ 23.02 dBm	161.07	mA

6.4.7. BG95-MF Power Consumption

Table 46: BG95-MF Power Consumption (3.8 V Power Supply, Room Temperature)

Description	Conditions	Average	Unit
Leakage	Power-off @ USB and UART disconnected	13.79	μA
PSM [26]	Power Saving Mode	4.04	μA
Rock Bottom	**AT+CFUN=0** @ Sleep mode	0.511	mA
Sleep Mode (USB disconnected)	LTE Cat M1 DRX = 1.28 s	1.59	mA
	LTE Cat NB1 DRX = 1.28 s	1.43	mA
	LTE Cat M1 e-I-DRX = 81.92 s @ PTW = 2.56 s, DRX = 1.28 s	0.58	mA
	LTE Cat NB1 e-I-DRX = 81.92 s @ PTW = 2.56 s, DRX = 1.28 s	0.56	mA
Idle Mode (USB disconnected)	LTE Cat M1 DRX = 1.28 s	18.05	mA
	LTE Cat NB1 DRX = 1.28 s	14.22	mA
	LTE Cat M1 e-I-DRX = 81.92 s @ PTW = 2.56 s, DRX = 1.28 s	17.97	mA

	LTE Cat NB1 e-I-DRX = 81.92 s @ PTW = 2.56 s, DRX = 1.28 s	14.1	mA
LTE Cat M1 data transfer (GNSS OFF)	B1 @ 21.11 dBm	175.75	mA
	B2 @ 21.31 dBm	174.58	mA
	B3 @ 20.92 dBm	168.92	mA
	B4 @ 21.1 dBm	170.65	mA
	B5 @ 21.07 dBm	188.66	mA
	B8 @ 21.13 dBm	185.65	mA
	B12 @ 21.14 dBm	178.63	mA
	B13 @ 21.37 dBm	192.08	mA
	B18 @ 21.49 dBm	193.67	mA
	B19 @ 21.26 dBm	192.39	mA
	B20 @ 21.28 dBm	191.3	mA
	B25 @ 21.05 dBm	175.43	mA
	B26 @ 21.15 dBm	190.49	mA
	B27 @ 21.54 dBm	194.89	mA
	B28A @ 21.09 dBm	179.64	mA
	B28B @ 21.08 dBm	186.91	mA
	B66 @ 20.93 dBm	169.54	mA
	B85 @ 21.4 dBm	180.21	mA
LTE Cat NB1 data transfer (GNSS OFF)	B1 @ 21.01 dBm	135.1	mA
	B2 @ 20.48 dBm	133.03	mA
	B3 @ 20.97 dBm	130.75	mA
	B4 @ 20.98 dBm	131.08	mA
	B5 @ 20.56 dBm	147.21	mA

	B8 @ 20.71 dBm	146.28	mA
	B12 @ 20.83 dBm	139.31	mA
	B13 @ 20.5 dBm	149.23	mA
	B18 @ 20.89 dBm	151.5	mA
	B19 @ 21.12 dBm	153.53	mA
	B20 @ 21.04 dBm	153.86	mA
	B25 @ 20.98 dBm	135.14	mA
	B28 @ 21.4 dBm	142.85	mA
	B66 @ 20.8 dBm	128.62	mA
	B71 @ 20.93 dBm	131.08	mA
	B85 @ 21.04 dBm	136.76	mA

6.4.8. BG95-M8 Power Consumption

Table 47: BG95-M8 Power Consumption (3.8 V Power Supply, Room Temperature)

Description	Conditions	Average	Unit
Leakage	Power-off @ USB and UART disconnected	14.01	μA
PSM [26]	Power Saving Mode	3.91	μA
Rock Bottom	**AT+CFUN=0** @ Sleep mode	0.65	mA
Sleep Mode (USB disconnected)	LTE Cat M1 DRX = 1.28 s	1.56	mA
	LTE Cat NB1 DRX = 1.28 s	1.51	mA
	EGSM900 DRX = 5	1.34	mA
	DCS1800 DRX = 5	1.29	mA
	LTE Cat M1 e-I-DRX = 81.92 s @ PTW = 2.56 s, DRX = 1.28 s	0.73	mA

	LTE Cat NB1 e-I-DRX = 81.92 s @ PTW = 2.56 s, DRX = 1.28 s	0.78	mA
Idle Mode (USB disconnected)	LTE Cat M1 DRX = 1.28 s	14.64	mA
	LTE Cat NB1 DRX = 1.28 s	14.52	mA
	LTE Cat M1 e-I-DRX = 81.92 s @ PTW = 2.56 s, DRX = 1.28 s	14.17	mA
	LTE Cat NB1 e-I-DRX = 81.92 s @ PTW = 2.56 s, DRX = 1.28 s	14.16	mA
LTE Cat M1 data transfer (GNSS OFF)	B1 @ 21.11 dBm	184	mA
	B2 @ 20.91 dBm	188	mA
	B3 @ 20.98 dBm	182	mA
	B4 @ 21.01 dBm	182	mA
	B5 @ 20.95 dBm	184	mA
	B8 @ 21.0 dBm	190	mA
	B12 @ 21.0 dBm	180	mA
	B13 @ 20.99 dBm	193	mA
	B18 @ 20.69 dBm	186	mA
	B19 @ 20.72 dBm	187	mA
	B20 @ 20.56 dBm	184	mA
	B25 @ 20.68 dBm	180	mA
	B26 @ 20.95 dBm	188	mA
	B27 @ 21.04 dBm	188	mA
	B28A @ 20.93 dBm	183	mA
	B28B @ 20.93 dBm	182	mA
	B31 @ 26.29 dBm	262	mA
	B66 @ 21.01 dBm	181	mA

	B72 @ 26.11 dBm	257	mA
	B73 @ 25.27 dBm	255	mA
	B85 @ 20.88 dBm	182	mA
LTE Cat NB1 data transfer (GNSS OFF)	B1 @ 21.61 dBm	149	mA
	B2 @ 21.08 dBm	136	mA
	B3 @ 21.02 dBm	143	mA
	B4 @ 21.59 dBm	151	mA
	B5 @ 21.33 dBm	159	mA
	B8 @ 21.35 dBm	160	mA
	B12 @ 21.46 dBm	146	mA
	B13 @ 21.09 dBm	162	mA
	B18 @ 21.2 dBm	154	mA
	B19 @ 21.17 dBm	156	mA
	B20 @ 21.1 dBm	156	mA
	B25 @ 21.27 dBm	153	mA
	B28 @ 21.19 dBm	156	mA
	B31 @ 25.92 dBm	235	mA
	B66 @ 20.85 dBm	152	mA
	B72 @ 26.09 dBm	236	mA
	B73 @ 25.95 dBm	230	mA
	B85 @ 21.0 dBm	147	mA
GPRS data transfer (GNSS OFF)	GSM850 4UL/1DL @ 28.01 dBm	577	mA
	GSM900 4UL/1DL @ 27.94 dBm	575	mA
	DCS1800 4UL/1DL @ 25.74 dBm	446	mA
	PCS1900 4UL/1DL @ 25.69 dBm	451	mA

EDGE data transfer (GNSS OFF)	GSM850 4UL/1DL @ 21.50 dBm	547	mA
	GSM900 4UL/1DL @ 21.28 dBm	552	mA
	DCS1800 4UL/1DL @ 21.34 dBm	473	mA
	PCS1900 4UL/1DL @ 21.25 dBm	479	mA

6.4.9. BG95-M9 Power Consumption

Table 48: BG95-M9 Power Consumption (3.8 V Power Supply, Room Temperature)

Description	Conditions	Average	Unit
Leakage	Power-off @ USB and UART disconnected	15.12	μA
PSM [24]	Power Saving Mode	4.44	μA
Rock Bottom	**AT+CFUN=0** @ Sleep mode	0.59	mA
Sleep Mode (USB disconnected)	LTE Cat M1 DRX = 1.28 s	1.37	mA
	LTE Cat NB1 DRX = 1.28 s	1.36	mA
	LTE Cat M1 e-I-DRX = 81.92 s @ PTW = 2.56 s, DRX = 1.28 s	0.62	mA
	LTE Cat NB1 e-I-DRX = 81.92 s @ PTW = 2.56 s, DRX = 1.28 s	0.72	mA
Idle Mode (USB disconnected)	LTE Cat M1 DRX = 1.28 s	14.49	mA
	LTE Cat NB1 DRX = 1.28 s	14.78	mA
	LTE Cat M1 e-I-DRX = 81.92 s @ PTW = 2.56 s, DRX = 1.28 s	13.92	mA
	LTE Cat NB1 e-I-DRX = 81.92 s @ PTW = 2.56 s, DRX = 1.28 s	13.93	mA
LTE Cat M1 data transfer (GNSS OFF)	B1 @ 22.85 dBm	215.48	mA
	B2 @ 23.15 dBm	208.04	mA

	B3 @ 23.11 dBm	206.09	mA
	B4 @ 22.93 dBm	205.30	mA
	B5 @ 22.67 dBm	209.33	mA
	B8 @ 22.47 dBm	211.97	mA
	B12 @ 22.95 dBm	208.88	mA
	B13 @ 22.50 dBm	198.00	mA
	B18 @ 22.07 dBm	202.10	mA
	B19 @ 22.55 dBm	207.05	mA
	B20 @ 22.10 dBm	207.85	mA
	B25 @ 23.0 dBm	203.85	mA
	B26 @ 22.52 dBm	206.96	mA
	B27 @ 22.20 dBm	201.60	mA
	B28A @ 23.09 dBm	205.80	mA
	B28B @ 23.08 dBm	204.63	mA
	B31 @ 26.02 dBm	280.00	mA
	B66 @ 23.32 dBm	209.61	mA
	B72 @ 25.96 dBm	283.00	mA
	B73 @ 26.24 dBm	282.00	mA
	B85 @ 23.05 dBm	200.66	mA
	B87 @ 22.87 dBm	210.19	mA
	B88 @ 22.88 dBm	211.54	mA
LTE Cat NB1 data transfer (GNSS OFF)	B1 @ 22.68 dBm	179.66	mA
	B2 @ 22.51 dBm	173.42	mA
	B3 @ 22.90 dBm	168.97	mA
	B4 @ 22.79 dBm	172.22	mA

	B5 @ 23.28 dBm	184.91	mA
	B8 @ 22.73 dBm	185.95	mA
	B12 @ 23.32 dBm	174.42	mA
	B13 @ 23.16 dBm	174.09	mA
	B18 @ 23.22 dBm	181.01	mA
	B19 @ 22.94 dBm	180.93	mA
	B20 @ 23.11 dBm	186.44	mA
	B25 @ 23.48 dBm	182.10	mA
	B28 @ 23.22 dBm	173.08	mA
	B31 @26.07 dBm	269.00	mA
	B66 @ 22.55 dBm	174.00	mA
	B72 @ 26.04 dBm	263.00	mA
	B73 @ 25.96 dBm	256.00	mA
	B85 @ 23.11 dBm	166.67	mA
	B86 @ 23.01 dBm	171.10	mA
	B87 @ 23.04 dBm	183.63	mA
	B88 @ 22.98 dBm	181.52	mA

6.4.10. BG95 Series GNSS Power Consumption

Table 49: GNSS Power Consumption of BG95-M1 (3.3 V Power Supply, Room Temperature)

Description	Conditions	Typ.	Unit
Acquisition (**AT+CFUN=0**)	Cold start @ Instrument	76.74	mA
	Hot start @ Instrument	74.04	mA
	Warm start @ Instrument	76.19	mA

	Lost state @ Instrument	76.05	mA
Tracking (**AT+CFUN=0**)	Instrument Environment @ Passive Antenna	23.14	mA
	Open Sky @ Real network, Passive Antenna	26.352	mA
	Open Sky @ Real network, Active Antenna	27.463	mA

Table 50: GNSS Power Consumption of BG95-M2 (3.3 V Power Supply, Room Temperature)

Description	Conditions	Typ.	Unit
Acquisition (**AT+CFUN=0**)	Cold start @ Instrument	76.74	mA
	Hot start @ Instrument	74.04	mA
	Warm start @ Instrument	76.19	mA
	Lost state @ Instrument	76.05	mA
Tracking (**AT+CFUN=0**)	Instrument Environment @ Passive Antenna	25.17	mA
	Open Sky @ Real network, Passive Antenna	22.717	mA
	Open Sky @ Real network, Active Antenna	25.698	mA

Table 51: GNSS Power Consumption of BG95-M3 (3.8 V Power Supply, Room Temperature)

Description	Conditions	Typ.	Unit
Acquisition (**AT+CFUN=0**)	Cold start @ Instrument	70.00	mA
	Hot start @ Instrument	73.66	mA
	Warm start @ Instrument	72.54	mA
	Lost state @ Instrument	69.24	mA
Tracking (**AT+CFUN=0**)	Instrument Environment @ Passive Antenna	22.31	mA
	Open Sky @ Real network, Passive Antenna	21.792	mA
	Open Sky @ Real network, Active Antenna	22.357	mA

Table 52: GNSS Power Consumption of BG95-M4 (3.8 V Power Supply, Room Temperature)

Description	Conditions	Typ.	Unit
Acquisition (**AT+CFUN=0**)	Cold start @ Instrument	64.90	mA
	Hot start @ Instrument	63.30	mA
	Warm start @ Instrument	64.47	mA
	Lost state @ Instrument	65.74	mA
Tracking (**AT+CFUN=0**)	Instrument Environment @ Passive Antenna	20.2	mA
	Open Sky @ Real network, Passive Antenna	23.045	mA
	Open Sky @ Real network, Active Antenna	23.173	mA

Table 53: GNSS Power Consumption of BG95-M5 (3.8 V Power Supply, Room Temperature)

Description	Conditions	Typ.	Unit
Acquisition (**AT+CFUN=0**)	Cold start @ Instrument	67.12	mA
	Hot start @ Instrument	65.98	mA
	Warm start @ Instrument	66.46	mA
	Lost state @ Instrument	67.62	mA
Tracking (**AT+CFUN=0**)	Instrument Environment @ Passive Antenna	27.95	mA
	Open Sky @ Real network, Passive Antenna	22.723	mA
	Open Sky @ Real network, Active Antenna	23.529	mA

Table 54: GNSS Power Consumption of BG95-M6 (3.8 V Power Supply, Room Temperature)

Description	Conditions	Typ.	Unit
Acquisition (**AT+CFUN=0**)	Cold start @ Instrument	65.54	mA
	Hot start @ Instrument	64.04	mA
	Warm start @ Instrument	65.37	mA

	Lost state @ Instrument	66.96	mA
Tracking (**AT+CFUN=0**)	Instrument Environment @ Passive Antenna	30.51	mA
	Open Sky @ Real network, Passive Antenna	21.608	mA
	Open Sky @ Real network, Active Antenna	27.773	mA

Table 55: GNSS Power Consumption of BG95-MF (3.8 V Power Supply, Room Temperature)

Description	Conditions	Typ.	Unit
Acquisition (**AT+CFUN=0**)	Cold start @ Instrument	69.72	mA
	Hot start @ Instrument	64.13	mA
	Warm start @ Instrument	70.81	mA
	Lost state @ Instrument	67.14	mA
Tracking (**AT+CFUN=0**)	Instrument Environment @ Passive Antenna	22.33	mA
	Open Sky @ Real network, Passive Antenna	20.065	mA
	Open Sky @ Real network, Active Antenna	21.829	mA

Table 56: GNSS Power Consumption of BG95-M8 (3.8 V Power Supply, Room Temperature)

Description	Conditions	Typ.	Unit
Acquisition (**AT+CFUN=0**)	Cold start @ Instrument	69.00	mA
	Hot start @ Instrument	69.18	mA
	Warm start @ Instrument	69.05	mA
	Lost state @ Instrument	68.01	mA
Tracking (**AT+CFUN=0**)	Instrument Environment @ Passive Antenna	20.52	mA
	Open Sky @ Real network, Passive Antenna	21.95	mA
	Open Sky @ Real network, Active Antenna	22.31	mA

Table 57: GNSS Power Consumption of BG95-M9 (3.8 V Power Supply, Room Temperature)

Description	Conditions	Typ.	Unit
Acquisition (**AT+CFUN=0**)	Cold start @ Instrument	61.20	mA
	Hot start @ Instrument	67.41	mA
	Warm start @ Instrument	60.09	mA
	Lost state @ Instrument	57.17	mA
Tracking (**AT+CFUN=0**)	Instrument Environment @ Passive Antenna	20.13	mA
	Open Sky @ Real network, Passive Antenna	21.36	mA
	Open Sky @ Real network, Active Antenna	21.66	mA

6.4.11. BG95-MF Wi-Fi Power Consumption

Table 58: Wi-Fi Power Consumption of BG95-MF (3.8 V Power Supply, Room Temperature)

Description	Conditions	Typ.	Unit
Acquisition (**AT+CFUN=0**)	Wi-Fi OFF (Module in sleep mode)	1.30	mA
	Wi-Fi OFF (Module in idle mode)	8.49	mA
	Wi-Fi ON (No scan)	78.5	mA
	Wi-Fi ON (Scan hotspots nearby)	80.84	mA
Scan	Wi-Fi ON (Get location)	16.80	mA

6.5. Tx Power

Table 59: Conducted Tx Power of BG95-M1/-M2/-M3/-MF

Frequency Bands	Max. Tx Power	Min. Tx Power
LTE HD-FDD B1/B2/B3/B4/B5/B8/B12/B13/B18/	21 dBm +1.7/-3 dB	< -39 dBm

B19/B20/B25/B26/B27/B28/B66/B71/B85		
GSM850/EGSM900	33 dBm ±2 dB	5 dBm ±5 dB
DCS1800/PCS1900	30 dBm ±2 dB	0 dBm ±5 dB
GSM850/EGSM900 (8-PSK)	27 dBm ±3 dB	5 dBm ±5 dB
DCS1800/PCS1900 (8-PSK)	26 dBm ±3 dB	0 dBm ±5 dB

Table 60: Conducted Tx Power of BG95-M4

Frequency Bands	Max. Tx Power	Min. Tx Power
LTE HD-FDD B1/B2/B3/B4/B5/B8/B12/B13/B18/ B19/B20/ B25/B26/B27/B28/B66/B85	21 dBm +1.7/-3 dB	< -39 dBm
LTE HD-FDD B31/B72/B73 @ Power Class 3	23 dBm ±2 dB	< -39 dBm
LTE HD-FDD B31/B72/B73 @ Power Class 2	26 dBm ±2 dB	< -39 dBm

Table 61: Conducted Tx Power of BG95-M5/-M6

Frequency Bands	Max. Tx Power	Min. Tx Power
LTE HD-FDD B1/B2/B3/B4/B5/B8/B12/B13/B18/B19/B20/ B25/B26/B27/B28/B66/B71/B85	23 dBm ±2 dB	< -39 dBm
GSM850/EGSM900	33 dBm ±2 dB	5 dBm ±5 dB
DCS1800/PCS1900	30 dBm ±2 dB	0 dBm ±5 dB
GSM850/EGSM900 (8-PSK)	27 dBm ±3 dB	5 dBm ±5 dB
DCS1800/PCS1900 (8-PSK)	26 dBm ±3 dB	0 dBm ±5 dB

Table 62: Conducted Tx Power of BG95-M8

Frequency Bands	Max. Tx Power	Min. Tx Power
LTE HD-FDD B1/B2/B3/B4/B5/B8/B12/B13/B18/B19/B20/ B25/B26/B27/B28/B66/B85	21 dBm ±1.7/-3 dB	< -39 dBm

LTE HD-FDD B31/B72/B73	26 dBm ±2 dB	< -39 dBm
GSM850/EGSM900	33 dBm ±2 dB	5 dBm ±5 dB
DCS1800/PCS1900	30 dBm ±2 dB	0 dBm ±5 dB
GSM850/EGSM900 (8-PSK)	27 dBm ±3 dB	5 dBm ±5 dB
DCS1800/PCS1900 (8-PSK)	26 dBm ±3 dB	0 dBm ±5 dB

Table 63: Conducted Tx Power of BG95-M9

Frequency Bands	Max. Tx Power	Min. Tx Power
LTE HD-FDD B1/B2/B3/B4/B5/B8/B12/B13/B18/B19/B20/ B25/B26/B27/B28/B66//B85/B86/B87/B88	23 dBm ±2 dB	< -39 dBm
B31/B72/B73	26 dBm ±2 dB	< -39 dBm

NOTE

1. LTE HD-FDD B26 and B27 are supported by Cat M1 only.
2. LTE HD-FDD B31, B72 and B73 are supported by BG95-M4, BG95-M8 and BG95-M9. For BG95-M4, LTE HD-FDD B31, B72 and B73 supports Power Class 2 (26 dBm) and Power Class 3 (23 dBm).
3. LTE HD-FDD B71 is supported by Cat NB2 only.
4. For GPRS transmission on 4 uplink timeslots, the maximum output power reduction is 4.0 dB. The design conforms to *3GPP TS 51.010-1 subclause 13.16*.

6.6. Rx Sensitivity

Table 64: BG95-M1 Conducted Rx Sensitivity

Mode	Band	Primary	Diversity	Receiving Sensitivity (dBm)	
				Cat M1/3GPP	Cat NB2
LTE	LTE HD-FDD B1	Supported	-	-108/-102.3	-
	LTE HD-FDD B2			-108.4/-100.3	

	LTE HD-FDD B3	-108.4/-99.3
	LTE HD-FDD B4	-108/-102.3
	LTE HD-FDD B5	-107.6/-100.8
	LTE HD-FDD B8	-108/-99.8
	LTE HD-FDD B12	-108.6/-99.3
	LTE HD-FDD B13	-107/-99.3
	LTE HD-FDD B18	-108/-102.3
	LTE HD-FDD B19	-108/-102.3
	LTE HD-FDD B20	-108/-99.8
	LTE HD-FDD B25	-108.2/-100.3
	LTE HD-FDD B26	-108.2/-100.3
	LTE HD-FDD B27	-108.4/-100.8
	LTE HD-FDD B28	-106.8/-100.8
	LTE HD-FDD B66	-107.8/-101.8
	LTE HD-FDD B71	-
	LTE HD-FDD B85	-108.4/-99.3

Table 65: BG95-M2 Conducted Rx Sensitivity

Mode	Band	Primary	Diversity	Receiver Sensitivity (dBm)	
				Cat M1/3GPP	Cat NB2 [27]/3GPP
LTE	LTE HD-FDD B1	Supported	-	-107/-102.3	-114/-107.5
	LTE HD-FDD B2			-107/-100.3	-116/-107.5
	LTE HD-FDD B3			-107/-99.3	-113/-107.5
	LTE HD-FDD B4			-107/-102.3	-114/-107.5

[27] 3GPP has made no requirements for LTE Cat NB Rx Sensitivity repetition.

	LTE HD-FDD B5		-107/-100.8	-115/-107.5
	LTE HD-FDD B8		-107/-99.8	-113/-107.5
	LTE HD-FDD B12		-107/-99.3	-116/-107.5
	LTE HD-FDD B13		-107/-99.3	-114/-107.5
	LTE HD-FDD B18		-107/-102.3	-116/-107.5
	LTE HD-FDD B19		-107/-102.3	-116/-107.5
	LTE HD-FDD B20		-107/-99.8	-115/-107.5
	LTE HD-FDD B25		-107/-100.3	-115/-107.5
	LTE HD-FDD B26		-107/-100.3	-
	LTE HD-FDD B27		-107/-100.8	-
	LTE HD-FDD B28		-107/-100.8	-115/-107.5
	LTE HD-FDD B66		-107/-101.8	-115/-107.5
	LTE HD-FDD B71		-	-115/-107.5
	LTE HD-FDD B85		-107/-99.3	-115/-107.5

Table 66: BG95-M3 Conducted Rx Sensitivity

Mode	Band	Primary	Diversity	Receiver Sensitivity (dBm)	
				Cat M1/3GPP	Cat NB2 [27]/3GPP
LTE	LTE HD-FDD B1	Supported	-	-106.5/-102.3	-113/-107.5
	LTE HD-FDD B2			-106/-100.3	-114/-107.5
	LTE HD-FDD B3			-106/-99.3	-114/-107.5
	LTE HD-FDD B4			-106.5/-102.3	-114/-107.5
	LTE HD-FDD B5			-106/-100.8	-115/-107.5
	LTE HD-FDD B8			-106/-99.8	-114/-107.5
	LTE HD-FDD B12			-106.5/-99.3	-115/-107.5

	LTE HD-FDD B13			-106.5-99.3	-115/-107.5
	LTE HD-FDD B18			-106/-102.3	-115/-107.5
	LTE HD-FDD B19			-106/-102.3	-115/-107.5
	LTE HD-FDD B20			-106/-99.8	-114/-107.5
	LTE HD-FDD B25			-106/-100.3	-114/-107.5
	LTE HD-FDD B26			-106/-100.3	-
	LTE HD-FDD B27			-106.5/-100.8	-
	LTE HD-FDD B28			-106/-100.8	-115/-107.5
	LTE HD-FDD B66			-106.5/-101.8	-114/-107.5
	LTE HD-FDD B71			-	-115/-107.5
	LTE HD-FDD B85			-106.5/-99.3	-115/-107.5

Mode	Band	Primary	Diversity	Receiver Sensitivity (dBm)
				GSM/3GPP
GPRS (CS2)	GSM850	Supported	-	-107/-102
	EGSM900			-107/-102
	DCS1800			-107/-102
	PCS1900			-106/-102

Table 67: BG95-M4 Conducted Rx Sensitivity

Mode	Band	Primary	Diversity	Receiver Sensitivity (dBm)	
				Cat M1/3GPP	Cat NB2 [27]/3GPP
LTE	LTE HD-FDD B1	Supported	-	-105.3/-102.3	-116/-107.5
	LTE HD-FDD B2			-103.3/-100.3	-116/-107.5
	LTE HD-FDD B3			-102.3/-99.3	-117/-107.5
	LTE HD-FDD B4			-105.3/-102.3	-116/-107.5

	LTE HD-FDD B5	-103.8/-100.8	-116/-107.5
	LTE HD-FDD B8	-103.3/-99.8	-116/-107.5
	LTE HD-FDD B12	-102.3/-99.3	-117/-107.5
	LTE HD-FDD B13	-101.8/-99.3	-116/-107.5
	LTE HD-FDD B18	-105.3/-102.3	-116/-107.5
	LTE HD-FDD B19	-105.3/-102.3	-116/-107.5
	LTE HD-FDD B20	-102.8/-99.8	-116/-107.5
	LTE HD-FDD B25	-102.8/-100.3	-116/-107.5
	LTE HD-FDD B26	-103.3/-100.3	-
	LTE HD-FDD B27	-103.8/-100.8	-
	LTE HD-FDD B28	-103.8/-100.8	-117/-107.5
	LTE HD-FDD B31	-99.6/-96.6	-116/-107.5
	LTE HD-FDD B66	-103.8/-101.8	-116/-107.5
	LTE HD-FDD B72	-99.6/-96.6	-116/-107.5
	LTE HD-FDD B73	-99.6/-96.6	-116/-107.5
	LTE HD-FDD B85	-102.3/-99.3	-116/-107.5

Table 68: BG95-M5 Conducted Rx Sensitivity

Mode	Band	Primary	Diversity	Receiver Sensitivity (dBm)	
				Cat M1/3GPP	Cat NB2 [27]/3GPP
LTE	LTE HD-FDD B1	Supported	-	-106.5/-102.3	-114/-107.5
	LTE HD-FDD B2			-107.5/-100.3	-115/-107.5
	LTE HD-FDD B3			-108.0/-99.3	-114/-107.5
	LTE HD-FDD B4			-108.0/-102.3	-114/-107.5
	LTE HD-FDD B5			-107.5/-100.8	-114/-107.5

	LTE HD-FDD B8			-106.5/-99.8	-114/-107.5
	LTE HD-FDD B12			-106.5/-99.3	-114/-107.5
	LTE HD-FDD B13			-107.5/-99.3	-114/-107.5
	LTE HD-FDD B18			-107.5/-102.3	-115/-107.5
	LTE HD-FDD B19			-107.5/-102.3	-114/-107.5
	LTE HD-FDD B20			-107.5/-99.8	-114/-107.5
	LTE HD-FDD B25			-107.5/-100.3	-114/-107.5
	LTE HD-FDD B26			-107.5/-100.3	-
	LTE HD-FDD B27			-107.5/-100.8	-
	LTE HD-FDD B28			-107.5/-100.8	-114/-107.5
	LTE HD-FDD B66			-107.5/-101.8	-114/-107.5
	LTE HD-FDD B71			-	-115/-107.5
	LTE HD-FDD B85			-107.5/-99.3	-114/-107.5

Mode	Band	Primary	Diversity	Receiver Sensitivity (dBm)
				GSM/3GPP
GPRS (CS2)	GSM850/EGSM900	Supported	-	-107/-102
	DCS1800/PCS1900			-107/-102

Table 69: BG95-M6 Conducted Rx Sensitivity

Mode	Band	Primary	Diversity	Receiver Sensitivity (dBm)	
				Cat M1/3GPP	Cat NB2 [27]/3GPP
LTE	LTE HD-FDD B1	Supported	-	-106.5/-102.3	-114/-107.5
	LTE HD-FDD B2			-107/-100.3	-115/-107.5
	LTE HD-FDD B3			-107/-99.3	-114/-107.5
	LTE HD-FDD B4			-106.5/-102.3	-114/-107.5

	LTE HD-FDD B5		-107.5/-100.8	-115/-107.5
	LTE HD-FDD B8		-107.5/-99.8	-115/-107.5
	LTE HD-FDD B12		-107.5/-99.3	-115/-107.5
	LTE HD-FDD B13		-107.5/-99.3	-115/-107.5
	LTE HD-FDD B18		-107.5/-102.3	-115/-107.5
	LTE HD-FDD B19		-107.5/-102.3	-115/-107.5
	LTE HD-FDD B20		-107.5/-99.8	-114/-107.5
	LTE HD-FDD B25		-107.5/-100.3	-114/-107.5
	LTE HD-FDD B26		-107.5/-100.3	-
	LTE HD-FDD B27		-107.5/-100.8	-
	LTE HD-FDD B28		-107.5/-100.8	-115/-107.5
	LTE HD-FDD B66		-107.5/-101.8	-114/-107.5
	LTE HD-FDD B71		-	-115/-107.5
	LTE HD-FDD B85		-107.5/-99.3	-115/-107.5

Table 70: BG95-MF Conducted Rx Sensitivity

Mode	Band	Primary	Diversity	Receiver Sensitivity (dBm)	
				Cat M1/3GPP	Cat NB2 [27]/3GPP
LTE	LTE HD-FDD B1	Supported	-	-108/-102.3	-115/-107.5
	LTE HD-FDD B2			-108/-100.3	-115/-107.5
	LTE HD-FDD B3			-107/-99.3	-115/-107.5
	LTE HD-FDD B4			-108/-102.3	-115/-107.5
	LTE HD-FDD B5			-108/-100.8	-115/-107.5
	LTE HD-FDD B8			-107 /-99.8	-115/-107.5
	LTE HD-FDD B12			-108/-99.3	-115/-107.5

	LTE HD-FDD B13	-108/-99.3	-115/-107.5
	LTE HD-FDD B18	-108/-102.3	-115/-107.5
	LTE HD-FDD B19	-107/-102.3	-115/-107.5
	LTE HD-FDD B20	-108/-99.8	-115/-107.5
	LTE HD-FDD B25	-108/-100.3	-115/-107.5
	LTE HD-FDD B26	-108/-100.3	-
	LTE HD-FDD B27	-108/-100.8	-
	LTE HD-FDD B28	-108/-100.8	-115/-107.5
	LTE HD-FDD B66	-108/-101.8	-115/-107.5
	LTE HD-FDD B71	-	-115/-107.5
	LTE HD-FDD B85	-108/-99.3	-115/-107.5

Table 71: BG95-MF Wi-Fi Conducted Rx Sensitivity

Frequency	Standard	Rate	Receiver Sensitivity
2.4 GHz	802.11b	1 Mbps	-93 dBm
	802.11b	11 Mbps	-88 dBm
	802.11g	6 Mbps	-90 dBm
	802.11g	54 Mbps	-74 dBm
	802.11n HT20	MCS0	-89 dBm
	802.11n HT20	MCS7	-70 dBm

Table 72: BG95-M8 Conducted Rx Sensitivity

Mode	Band	Primary	Diversity	Receiver Sensitivity (dBm)	
				Cat M1/3GPP	Cat NB2 [27]/3GPP
LTE	LTE HD-FDD B1	Supported	-	-106.5/-102.3	-115/-107.5

	LTE HD-FDD B2			-107.0/-100.3	-115/-107.5
	LTE HD-FDD B3			-107.0/-99.3	-115/-107.5
	LTE HD-FDD B4			-106.5/-102.3	-115/-107.5
	LTE HD-FDD B5			-107.5/-100.8	-116/-107.5
	LTE HD-FDD B8			-107.5/-99.8	-116/-107.5
	LTE HD-FDD B12			-108.0/-99.3	-116/-107.5
	LTE HD-FDD B13			-108.0/-99.3	-116/-107.5
	LTE HD-FDD B18			-108.0/-102.3	-116/-107.5
	LTE HD-FDD B19			-107.5/-102.3	-116/-107.5
	LTE HD-FDD B20			-107.5/-99.8	-116/-107.5
	LTE HD-FDD B25			-106.5/-100.3	-115/-107.5
	LTE HD-FDD B26			-107.5/-100.3	-
	LTE HD-FDD B27			-107.5/-100.8	-
	LTE HD-FDD B28			-108.0/-100.8	-116/-107.5
	LTE HD-FDD B31			-107.0/-96.6	-115/-107.5
	LTE HD-FDD B66			-106.5/-101.8	-115/-107.5
	LTE HD-FDD B72			-106.0/-96.6	-115/-107.5
	LTE HD-FDD B73			-106.0/-96.6	-115/-107.5
	LTE HD-FDD B85			-108.0/-99.3	-115/-107.5

Mode	**Band**	**Primary**	**Diversity**	**Receiver Sensitivity (dBm)**
				GSM/3GPP
GPRS (CS2)	GSM850/EGSM900	Supported	-	-107/-102
	DCS1800/PCS1900			-107/-102

Table 73: BG95-M9 Conducted Rx Sensitivity

Mode	Band	Primary	Diversity	Receiver Sensitivity (dBm)	
				Cat M1/3GPP	Cat NB2 [27]/3GPP
LTE	LTE HD-FDD B1	Supported	-	-107.3/-102.3	-116/-107.5
	LTE HD-FDD B2			-107.3/-100.3	-116/-107.5
	LTE HD-FDD B3			-107.3/-99.3	-116/-107.5
	LTE HD-FDD B4			-107.3/-102.3	-116/-107.5
	LTE HD-FDD B5			-107.8/-100.8	-116/-107.5
	LTE HD-FDD B8			-107.8/-99.8	-116/-107.5
	LTE HD-FDD B12			-108.3/-99.3	-116/-107.5
	LTE HD-FDD B13			-108.8/-99.3	-116/-107.5
	LTE HD-FDD B18			-107.3/-102.3	-116/-107.5
	LTE HD-FDD B19			-107.3/-102.3	-116/-107.5
	LTE HD-FDD B20			-107.8/-99.8	-116/-107.5
	LTE HD-FDD B25			-107.8/-100.3	-116/-107.5
	LTE HD-FDD B26			-107.8/-100.3	-
	LTE HD-FDD B27			-107.7/-100.8	-
	LTE HD-FDD B28			-107.8/-100.8	-116/-107.5
	LTE HD-FDD B31			-107.8/-96.6	-116/-107.5
	LTE HD-FDD B66			-106.8/-101.8	-116/-107.5
	LTE HD-FDD B72			-107.8/-96.6	-116/-107.5
	LTE HD-FDD B73			-107.8/-96.6	-116/-107.5
	LTE HD-FDD B85			-108.3/-99.3	-116/-107.5
	LTE HD-FDD B86			-	-117/-107.5
	LTE HD-FDD B87			-106.6/-96.6	-115/-107.5

LTE HD-FDD B88	-106.6/-96.6	-115/-107.5

NOTE

-: not supported.

6.7. ESD Protection

Static electricity occurs naturally and it may damage the module. Therefore, it is imperative to adopt proper ESD countermeasures and handling methods. For example, wear anti-static gloves during the development, production, assembly and testing of the module; add ESD protection components to the ESD sensitive interfaces and points in the product design.

Table 74: Electrostatic Discharge Characteristics (Temperature: 25–30 °C, Humidity: 40 ±5 %)

Tested Interfaces	Contact Discharge	Air Discharge	Unit
VBAT, GND	±6	±8	kV
Main/GNSS Antenna Interfaces	±5	±6	kV

7 Mechanical Information

This chapter describes the mechanical dimensions of the module. All dimensions are measured in millimeter (mm), and the dimensional tolerances are ±0.2 mm unless otherwise specified.

7.1. Mechanical Dimensions

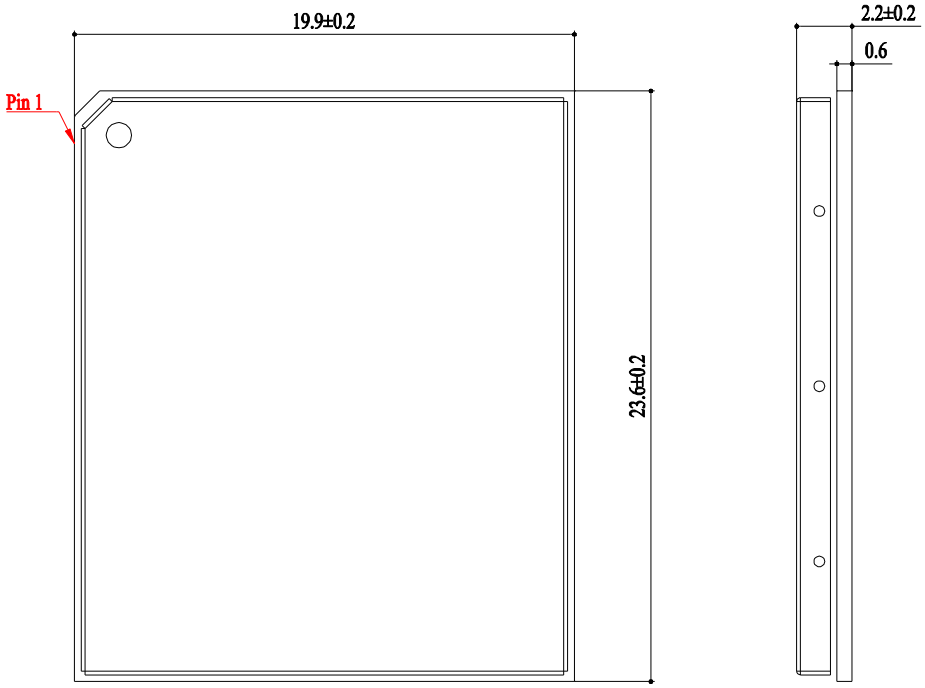

Figure 43: Module Top and Side Dimensions

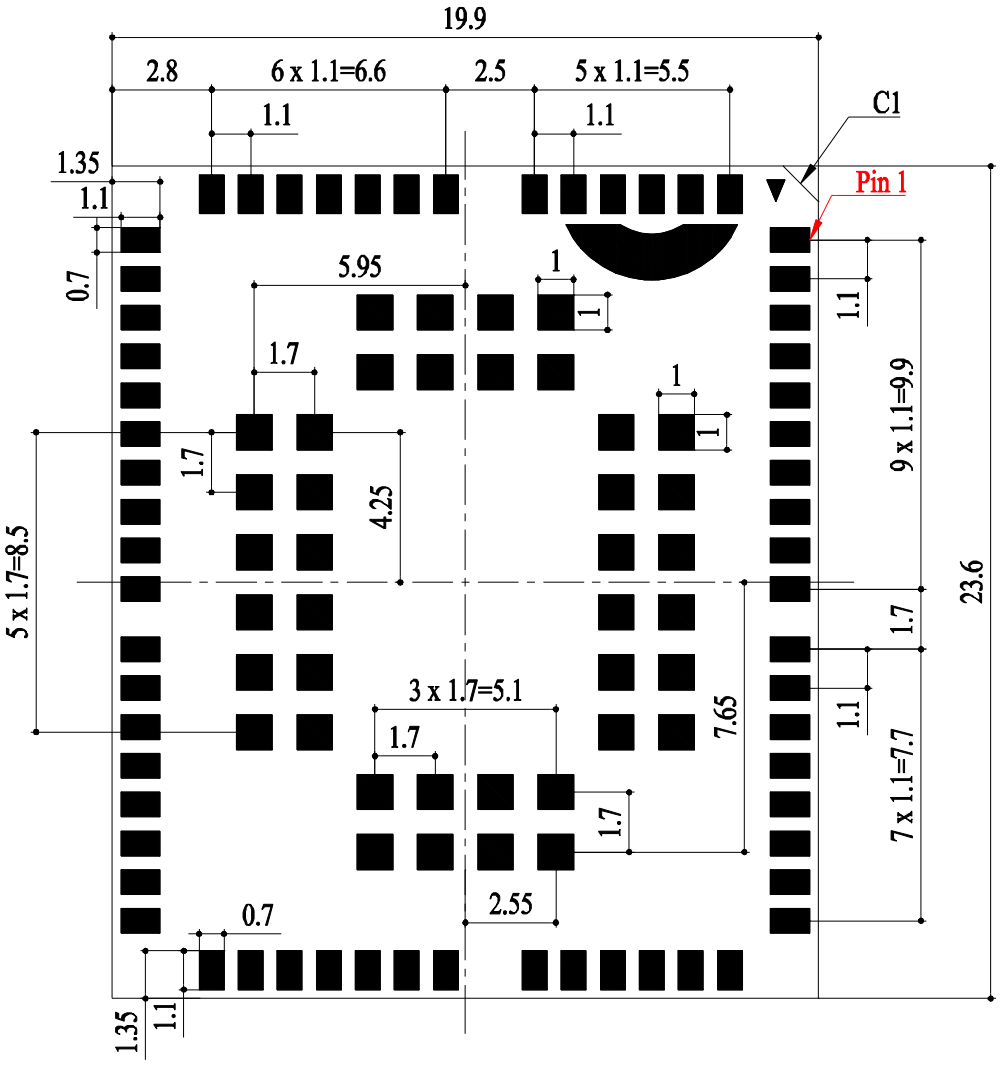

Figure 44: Module Bottom Dimensions (Bottom View)

NOTE

The package warpage level of the module conforms to *JEITA ED-7306* standard.

7.2. Recommended Footprint

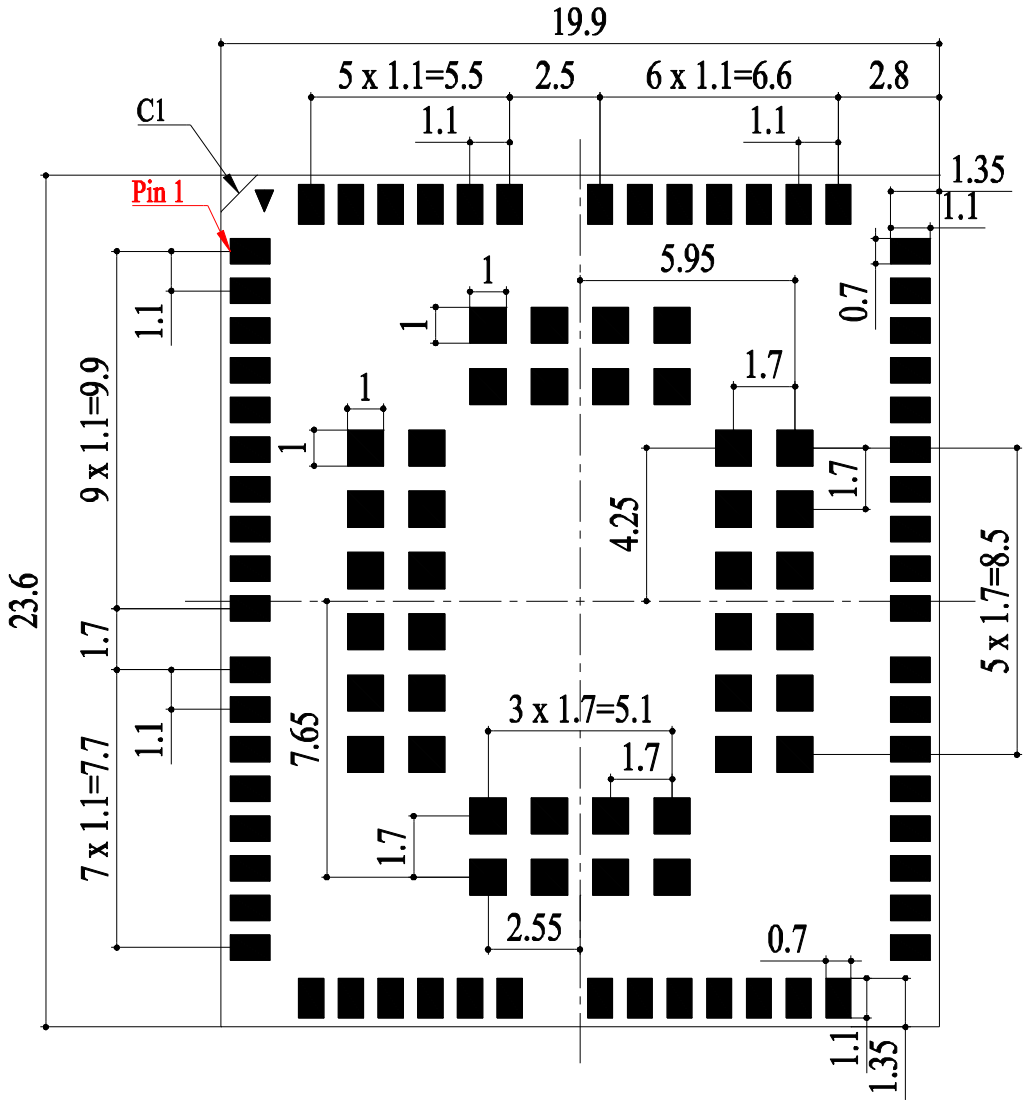

Figure 45: Recommended Footprint (Top View)

NOTE

Keep at least 3 mm between the module and other components on the motherboard to improve soldering quality and maintenance convenience.

7.3. Top and Bottom Views



Figure 46: Top and Bottom Views

NOTE

Images above are for illustration purpose only and may differ from the actual module. For authentic appearance and label, please refer to the module received from Quectel.

8 Storage, Manufacturing and Packaging

8.1. Storage Conditions

The module is provided with vacuum-sealed packaging. MSL of the module is rated as 3. The storage requirements are shown below.

1. Recommended Storage Condition: the temperature should be 23 ±5 °C and the relative humidity should be 35–60 %.

2. Shelf life (in a vacuum-sealed packaging): 12 months in Recommended Storage Condition.

3. Floor life: 168 hours [28] in a factory where the temperature is 23 ±5 °C and relative humidity is below 60 %. After the vacuum-sealed packaging is removed, the module must be processed in reflow soldering or other high-temperature operations within 168 hours. Otherwise, the module should be stored in an environment where the relative humidity is less than 10 % (e.g., a dry cabinet).

4. The module should be pre-baked to avoid blistering, cracks and inner-layer separation in PCB under the following circumstances:

   - The module is not stored in Recommended Storage Condition;
   - Violation of the third requirement mentioned above;
   - Vacuum-sealed packaging is broken, or the packaging has been removed for over 24 hours;
   - Before module repairing.

5. If needed, the pre-baking should follow the requirements below:

   - The module should be baked for 8 hours at 120 ±5 °C;
   - The module must be soldered to PCB within 24 hours after the baking, otherwise it should be put in a dry environment such as in a dry cabinet.

[28] This floor life is only applicable when the environment conforms to *IPC/JEDEC J-STD-033*. It is recommended to start the solder reflow process within 24 hours after the package is removed if the temperature and moisture do not conform to, or are not sure to conform to *IPC/JEDEC J-STD-033*. Do not unpack the modules in large quantities until they are ready for soldering.

NOTE

1. To avoid blistering, layer separation and other soldering issues, extended exposure of the module to the air is forbidden.
2. Take out the module from the package and put it on high-temperature-resistant fixtures before baking. If shorter baking time is desired, see *IPC/JEDEC J-STD-033* for the baking procedure.
3. Pay attention to ESD protection, such as wearing anti-static gloves, when touching the modules.

8.2. Manufacturing and Soldering

Push the squeegee to apply the solder paste on the surface of stencil, thus making the paste fill the stencil openings and then penetrate to the PCB. Apply proper force on the squeegee to produce a clean stencil surface on a single pass. To guarantee module soldering quality, the thickness of stencil for the module is recommended to be 0.13–0.15 mm. For more details, see ***document [6]***.

The recommended peak reflow temperature should be 235–246 ºC, with 246 ºC as the absolute maximum reflow temperature. To avoid damage to the module caused by repeated heating, it is recommended that the module should be mounted only after reflow soldering for the other side of PCB has been completed. The recommended reflow soldering thermal profile (lead-free reflow soldering) and related parameters are shown below.

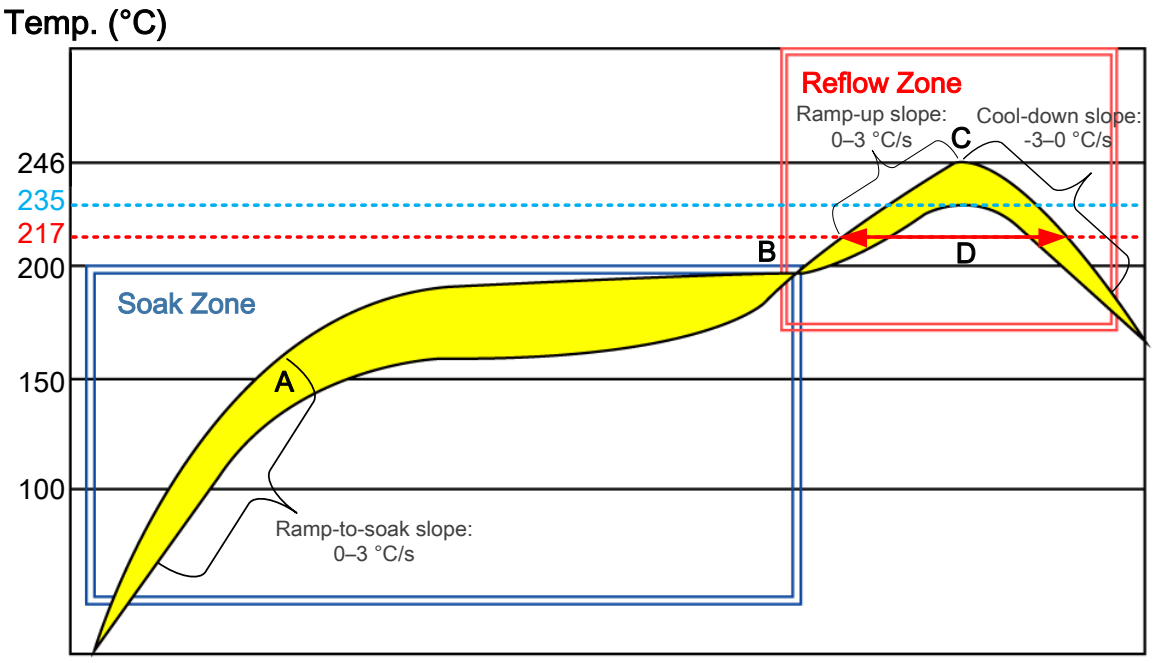

Figure 47: Recommended Reflow Soldering Thermal Profile

Table 75: Recommended Thermal Profile Parameters

Factor	Recommended Value
Soak Zone	
Ramp-to-soak Slope	0–3 °C/s
Soak Time (between A and B: 150 °C and 200 °C)	70–120 s
Reflow Zone	
Ramp-up Slope	0–3 °C/s
Reflow Time (D: over 217°C)	40–70 s
Max Temperature	235–246 °C
Cool-down Slope	-3–0 °C/s
Reflow Cycle	
Max Reflow Cycle	1

NOTE

1. The above profile parameter requirements are for the measured temperature of the solder joints. Both the hottest and coldest spots of solder joints on the PCB should meet the above requirements.
2. If a conformal coating is necessary for the module, do NOT use any coating material that may chemically react with the PCB or shielding cover, and prevent the coating material from flowing into the module.
3. Avoid using ultrasonic technology for module cleaning since it can damage crystals inside the module.
4. Due to the complexity of the SMT process, please contact Quectel Technical Supports in advance for any situation that you are not sure about, or any process (e.g., selective soldering, ultrasonic soldering) that is not mentioned in ***document [6]***.

8.3. Packaging Specifications

This chapter describes only the key parameters and process of packaging. All figures below are for reference only. The appearance and structure of the packaging materials are subject to the actual delivery.

The module adopts carrier tape packaging and details are as follow:

8.3.1. Carrier Tape

Dimension details are as follow:

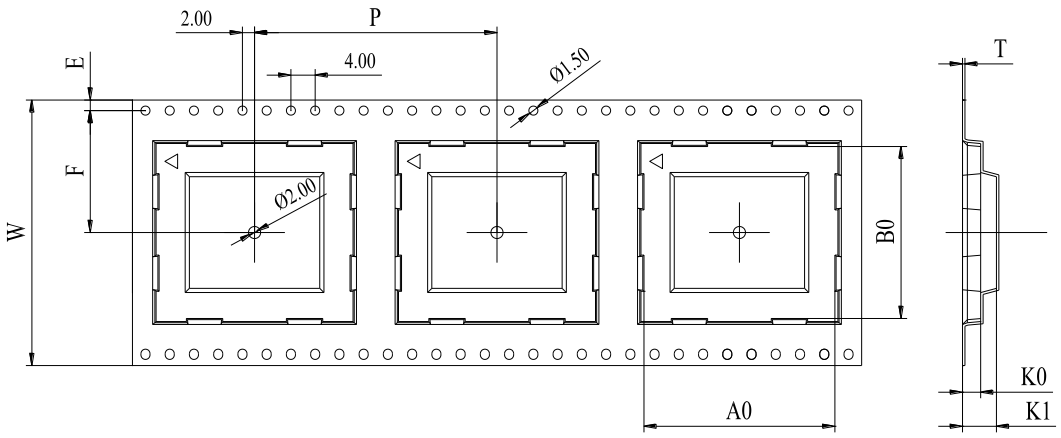

Figure 48: Carrier Tape Dimension Drawing

Table 76: Carrier Tape Dimension Table (Unit: mm)

W	P	T	A0	B0	K0	K1	F	E
44	32	0.35	20.2	24	3.15	6.65	20.2	1.75

8.3.2. Plastic Reel

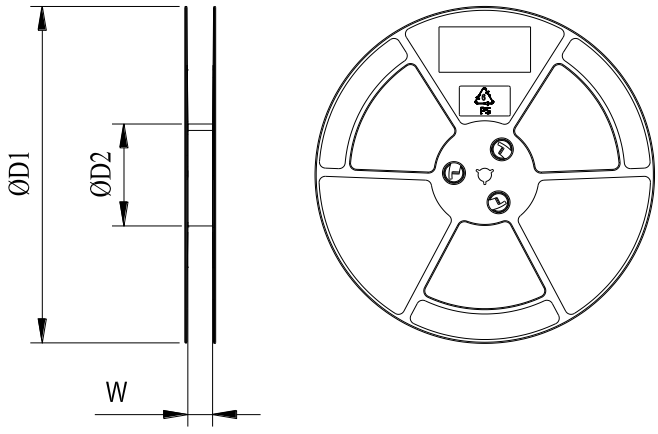

Figure 49: Plastic Reel Dimension Drawing

Table 77: Plastic Reel Dimension Table (Unit: mm)

øD1	øD2	W
330	100	44.5

8.3.3. Mounting Direction

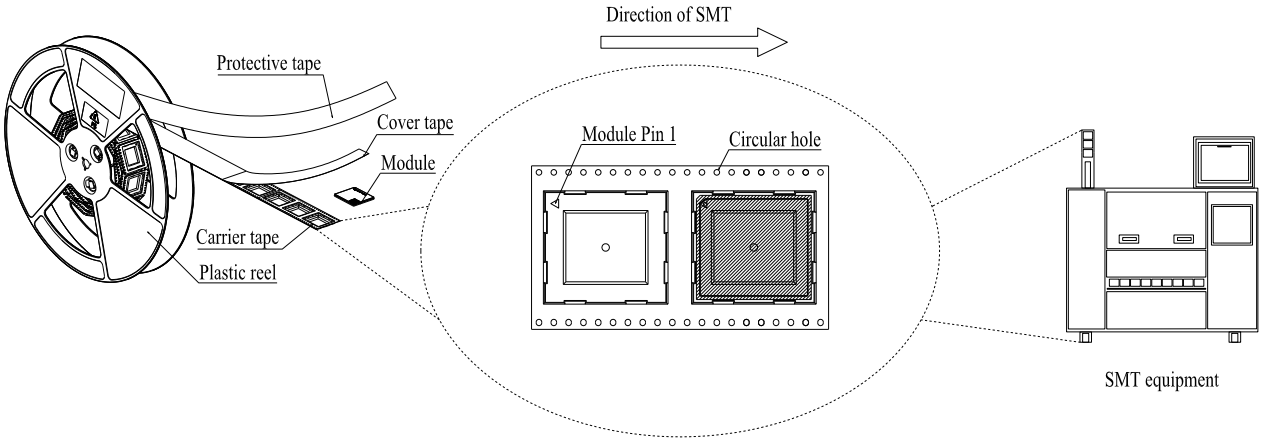

Figure 50: Mounting Direction

8.3.4. Packaging Process

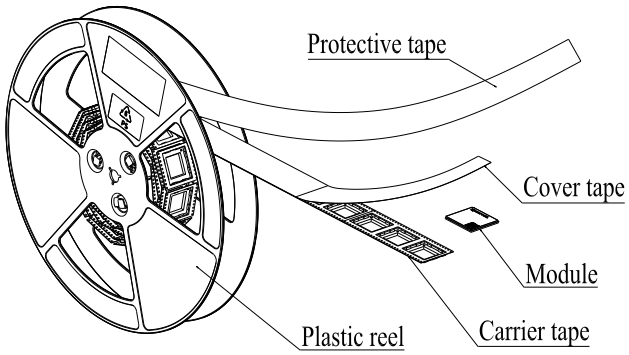

Place the module into the carrier tape and use the cover tape to cover them; then wind the heat-sealed carrier tape to the plastic reel and use the protective tape for protection. One plastic reel can load 250 modules.

Place the packaged plastic reel, humidity indicator card and desiccant bag into a vacuum bag, then vacuumize it.

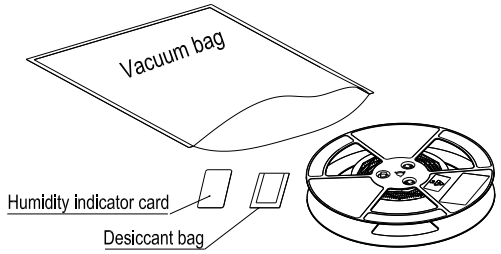

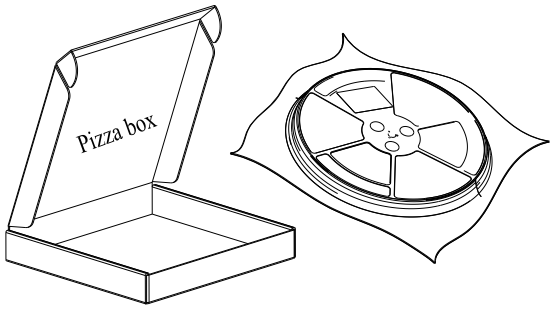

Place the vacuum-packed plastic reel into a pizza box.

Put 4 pizza boxes into 1 carton and seal it. One carton can pack 1000 modules.

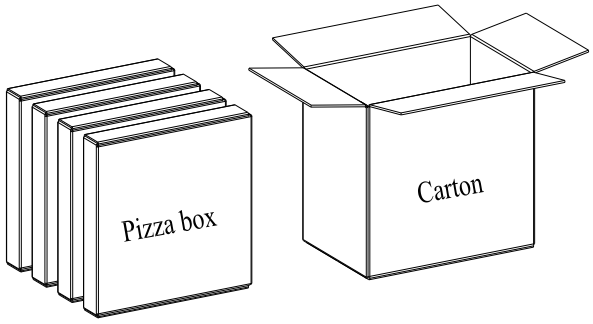

Figure 51: Packaging Process

Table 78: Packaging Specifications of BG95 Series Module

MOQ for MP	Minimum Package: 250	Minimum Package × 4 = 1000
250	Size: 370 mm × 350 mm × 56 mm Net Weight: 0.61 kg Gross Weight: 1.35 kg	Size: 380 mm × 250 mm × 365 mm Net Weight: 2.45 kg Gross Weight: 6.28 kg

9 Appendix A References

Table 79: Related Documents

Document Name
[1] Quectel_BG95&BG77&BG600L_Series_GNSS_Application_Note
[2] Quectel_UMTS&LTE_EVB_User_Guide
[3] Quectel_BG95&BG77&BG600L_Series_AT_Commands_Manual
[4] Quectel_BG95&BG77&BG600L_Series_QCFG_AT_Commands_Manual
[5] Quectel_RF_Layout_Application_Note
[6] Quectel_Module_SMT_Application_Note

Table 80: Terms and Abbreviations

Abbreviation	Description
ASM	Antenna Switch Modules
bps	Bits per second
CHAP	Challenge Handshake Authentication Protocol
CS	Coding Scheme
CTS	Clear To Send
DFOTA	Delta Firmware Upgrade Over-The-Air
DL	Downlink
DTR	Data Terminal Ready
e-I-DRX	Extended Idle Mode Discontinuous Reception
EPC	Evolved Packet Core

ESD	Electrostatic Discharge
FDD	Frequency Division Duplex
GMSK	Gaussian Minimum Shift Keying
GSM	Global System for Mobile Communications
HSS	Home Subscriber Server
I2C	Inter-Integrated Circuit
I/O	Input/Output
LED	Light Emitting Diode
LDO	Low-dropout Regulator
LNA	Low Noise Amplifier
LPF	Low-Pass Filter
LTE	Long Term Evolution
MO	Mobile Originated
MOQ	Minimum Order Quantity
MT	Mobile Terminated
PA	Power Amplifier
PAP	Password Authentication Protocol
PCB	Printed Circuit Board
PDU	Protocol Data Unit
PMIC	Power Management IC
PPP	Point-to-Point Protocol
PSM	Power Saving Mode
RF	Radio Frequency
RHCP	Right Hand Circularly Polarized
Rx	Receive

SAW	Surface Acoustic Wave
SMS	Short Message Service
TDD	Time Division Duplex
TX	Transmit
UL	Uplink
UE	User Equipment
URC	Unsolicited Result Code
(U)SIM	(Universal) Subscriber Identity Module
Vmax	Maximum Voltage
Vnom	Nominal Voltage
Vmin	Minimum Voltage
V_{IH}max	Maximum High-Level Input Voltage
V_{IH}min	Minimum High-level Input Voltage
V_{IL}max	Maximum Low-level Input Voltage
V_{IL}min	Minimum Low-level Input Voltage
V_{I}max	Absolute Maximum Input Voltage
V_{I}min	Absolute Minimum Input Voltage
V_{OH}max	Maximum High-level Output Voltage
V_{OH}min	Minimum High-level Output Voltage
V_{OL}max	Maximum Low-level Output Voltage
V_{OL}min	Minimum Low-level Output Voltage
VSWR	Voltage Standing Wave Ratio
WWAN	Wireless Wide Area Network

10 Appendix B Compulsory Certifications

By the issue date of the document, BG95-M1, BG95-M2, BG95-M3, BG95-M5 and BG95-M6 have been certified by JATE and TELEC.

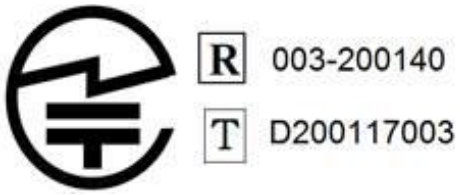

Figure 52: JATE/TELEC Certification ID of BG95-M1/-M2

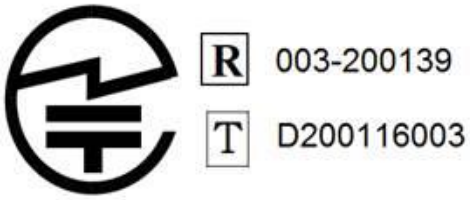

Figure 53: JATE/TELEC Certification ID of BG95-M3

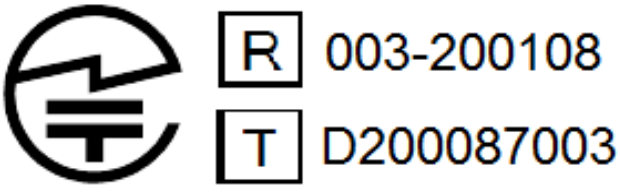

Figure 54: JATE/TELEC Certification ID of BG95-M5

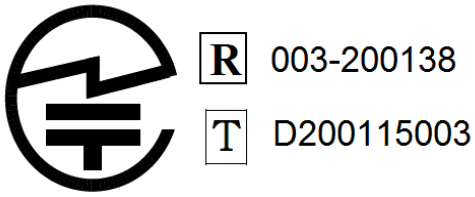

Figure 55: JATE/TELEC Certification ID of BG95-M6